2603347-D EN 2610

DL SERIES

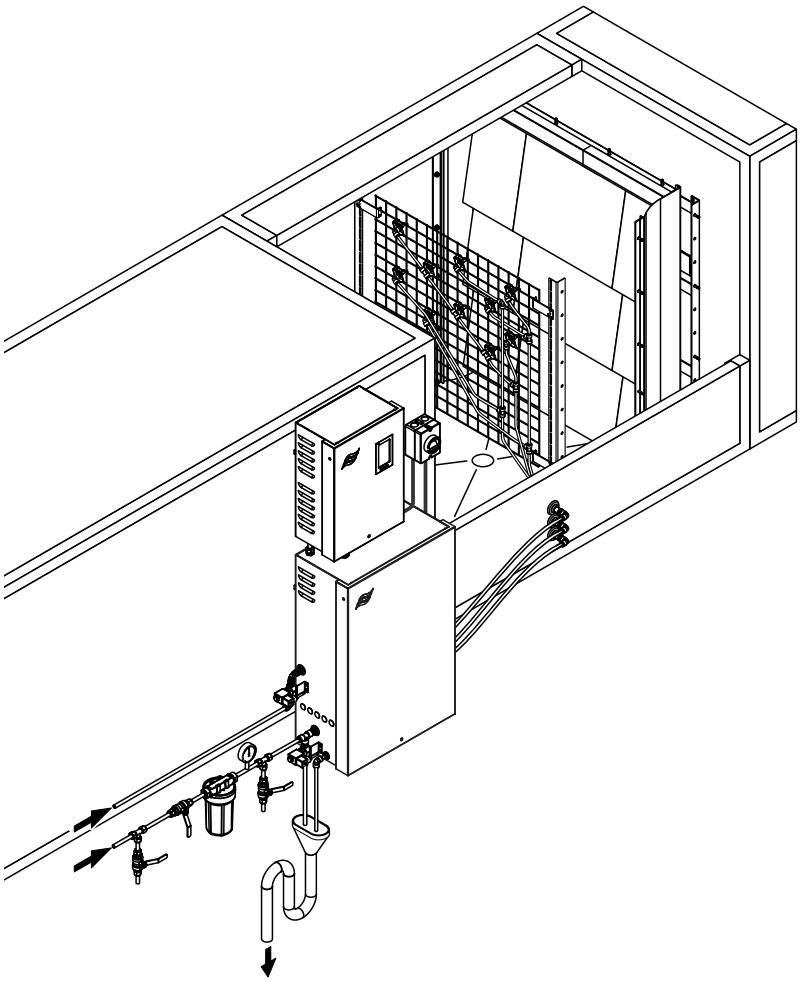

READ AND SAVE THESE INSTRUCTIONS

OPERATION MANUAL

Adiabatic humidification system
Condair **DL II**

Humidification, Dehumidification
and Evaporative Cooling

condair

Thank you for choosing Condair

Installation date (MM/DD/YYYY):

Commissioning date (MM/DD/YYYY):

Site:

Model:

Serial number:

Fill in data at the commissioning!

Proprietary Notice

This document and the information disclosed herein are proprietary data of Condair Group AG. Neither this document, nor the information contained herein shall be reproduced, used, or disclosed to others without the written authorization of Condair Group AG, except to the extent required for installation or maintenance of recipient's equipment.

Liability Notice

Condair Group AG does not accept any liability due to incorrect installation or operation of the equipment or due to the use of parts/components/equipment that are not authorized by Condair Group AG.

Open Source Software

The Condair Controller includes the following open source software owned by third parties:

Cryptolib Source: *https://github.com/MicrochipTech/cryptoauthlib* Licence: Microchip Technology *https://github.com/MicrochipTech/cryptoauthlib/blob/main/license.txt*	**TouchGFX** Source: *https://www.st.com/en/embedded-software/x-cube-touchgfx.html* Licence: ST License Agreement *https://www.st.com/resource/en/license_agreement/dm00218346.pdf*
mbedTLS Source: *https://github.com/Mbed-TLS/mbedtls* Licence: Appache 2.0 *https://spdx.org/licenses/Apache-2.0.html* *https://github.com/Mbed-TLS/mbedtls/blob/development/LICENSE*	**Embedded Template Library (ETL)** Source: *https://github.com/ETLCPP/etl* Licence: MIT *https://github.com/ETLCPP/etl/blob/master/LICENSE*

Copyright Notice

© Condair Group AG, All rights reserved.

Misapprehension and Technical modifications reserved.

Contents

1	**Introduction**	**5**
1.1	General	5
1.2	Notes on the operation manual	5
2	**For your safety**	**7**
3	**Product Overview**	**10**
3.1	Models overview	10
3.2	Product designation / Which model do you have	10
3.3	Basic design the humidification system Condair DL	11
3.4	Functional description	12
3.5	Hydraulic diagram	14
3.6	System overview Condair DL	15
3.7	Overview humidification unit Condair DL	16
3.8	Overview control unit Condair DL	17
3.9	Overview central unit Condair DL	18
4	**Operation**	**19**
4.1	First-time commissioning	19
4.2	Display and operating elements	20
4.3	Recommissioning after interruption of operation	21
4.4	Notes on operation	22
4.4.1	Important notes on operation	22
4.4.2	Remote operating and fault indication	22
4.4.3	Inspections during operation	22
4.4.4	Flushing of the internal water system	23
4.4.5	Wash over of the ceramic plates	24
4.5	Decommissioning the system	25
5	**Operating the Condair DL control software**	**26**
5.1	Home screen	26
5.1.1	Device and error status indication field	27
5.1.2	Humidity control indication field	28
5.1.3	Maintenance indication field	28
5.2	Information functions in the "Help" Menu	29
5.2.1	Acsessing the "Help" menu	29
5.2.2	Query operating states in the "About" submenu	30
5.2.3	Quick access to setting parameters in the "Quick Access" submenu	31
5.3	Configuration	32
5.3.1	Settings and features in the "General" submenu	32
5.3.1.1	Accessing the "General" submenu	32
5.3.1.2	Determine language and system of units in the "Region" submenu	32
5.3.1.3	Date and time settings in the "Date & Time" submenu	33
5.3.1.4	Read in parameter settings in the "Backup" submenu	33
5.3.1.5	Activate/Deactivate password protection in the "Password Settings" submenu	34
5.3.1.6	Set the brightness of the touchscreen and the LED in the "Brightness" submenu	34
5.3.2	Settings and features in the "Maintenance" submenu	35
5.3.2.1	Accessing the "Maintenance" submenu	35
5.3.2.2	Reset functions in the "Reset" submenu	35
5.3.2.3	Software update in the "Update" submenu	36
5.3.2.4	View and export malfunctions and maintenance histories in the "Histories" submenu	36

5.3.2.5 Load and export the error log file in the "Error Analyzer" submenu 37
5.3.2.6 Start operating data recording in the "USB Data Logger" submenu 37
5.3.2.7 View operating states in the submenu "Diagnostics > Input Diagnostics" 38
5.3.2.8 Checking the relays of the remote operating and fault indication board in the "Diagnostics > RFI Diagnostics" submenu 39
5.3.3 Settings and features in the "Features" 39
5.3.3.1 Accessing the "Features" submenu 39
5.3.3.2 Set the power limitation in the "Operation" submenu 40
5.3.3.3 Set the flush timer in the "Flush Timer" submenu 40
5.3.3.4 Activate/deactivate the softstart function in the "Softstart" submenu 40
5.3.3.5 Activate/deactivate the ceramic wash over function in the "Ceramic Wash Over" submenu 41
5.3.4 Settings and features in the "Controls" submenu 42
5.3.4.1 Accessing the "Controls" submenu 42
5.3.4.2 Control settings in the "Signal Settings" submenu 43
5.3.5 Communication settings in the "Network" submenu 44
5.3.5.1 Accessing the "Network" submenu 44
5.3.5.2 Settings in the "IP Settings" submenu 45
5.3.5.3 Settings in the "IoT Settings" submenu 46
5.3.5.4 Settings in the "Modbus Settings" submenu 46
5.3.5.5 Settings in the "BACnet Settings" submenu 46
5.3.5.6 Settings in the "Remote Fault Indication" submenu 47

6 Maintenance and Replacement of components 48
6.1 Important notes on maintenance 48
6.2 Hygiene and Maintenance according to VDI 6022 Page 1 49
6.2.1 Periodical checking 49
6.2.2 Total system maintenance 50
6.3 Notes on cleaning and cleaning agents 52
6.4 Removal and installation of components 53
6.4.1 Removal and installation of the ceramic plates 53
6.4.2 Removal and installation of the spray nozzles 55
6.4.3 Removal and installation of the nozzle support 56
6.5 Replacement of the silver cartridge "Hygiene Plus" 57
6.6 Replacement of the optional sterile filter and de-aeration of the filter housing 59
6.7 Resetting the Ag-ion maintenance counter 61
6.7.1 Resetting the maintenance counter for the system maintenance 61
6.8 Performing a software update 62

7 Fault elimination 63
7.1 Important notes on fault elimination 63
7.2 Fault indication 64
7.3 Malfunction list 65
7.4 Malfunctions without indication 71
7.5 Saving fault and service histories to a USB stick 72
7.6 Resetting malfunction indication 73
7.7 Replacing the fuses and backup battery in the control unit 74

8 Taking out of service/Disposal 75
8.1 Taking out of service 75
8.2 Disposal/Recycling 75

9 Product specification 76
9.1 Technical data 76
9.2 Options 78

1 Introduction

1.1 General

We thank you for having purchased the **adiabatic air humidification system Condair DL**.

The humidification system Condair DL incorporates the latest technical advances and meets all recognized safety standards. Nevertheless, improper use of the humidification system Condair DL may result in danger to the user or third parties and/or impairment of material assets.

To ensure a safe, proper, and economical operation of the humidification system Condair DL, please observe and comply with all information and safety instructions contained in the present documentation as well as in the separate documentations of the components installed in the humidification system.

If you have questions after reading this documentation, please contact your Condair representative. They will be glad to assist you.

1.2 Notes on the operation manual

Limitation

The subject of this operation manual is the humidification system Condair DL. The various options and accessories are only described insofar as this is necessary for proper operation of the equipment. Further information on options and accessories can be obtained in the respective instructions.

This operation manual is restricted to the **commissioning**, **operation**, **maintenance** and **troubleshooting** of the humidification system Condair DL and is meant for **well-trained personnel being sufficiently qualified for their respective work**.

This operation manual is supplemented by various separate items of documentation (operation manual, spare parts list, etc.), which are included in the delivery as well. Where necessary, appropriate cross-references are made to these publications in the operation manual.

Symbols used in this manual

CAUTION!

The catchword "CAUTION" used in conjunction with the general caution symbol designates notes in this operation manual that, if neglected, may cause **damage and/or malfunction of the unit or other material assets**.

WARNING!

The catchword "WARNING" used in conjunction with the general caution symbol designates safety and danger notes in this operation manual that, if neglected, may cause to **injury to persons**.

DANGER!

The catchword "DANGER" used in conjunction with the general caution symbol designates safety and danger notes in this operation manual that, if neglected, may lead to **severe injury or even death of persons**.

Safekeeping

Please safeguard this operation manual in a safe place, where they can be immediately accessed. If the equipment changes hands, the documentation must be passed on to the new operator.

If the documentation gets mislaid, please contact your Condair representative.

Language versions

This operation manual is available in various languages. Please contact your Condair representative for information.

2 For your safety

General

Every person working with the humidification system Condair DL must have read and understood the installation manual and the operation manual of the Condair DL before carrying out any work.
Knowing and understanding the contents of the installation manual and the operation manual is a basic requirement for protecting the personnel against any kind of danger, to prevent faulty operation, and to operate the unit safely and correctly.

All ideograms, signs and markings applied to the components of the humidification system Condair DL must be observed and kept in readable state.

Qualification of personnel

All work described in this operation manual **may only be carried out by specialist who are well-trained and adequately qualified and are authorized by the customer**.
For safety and warranty reasons any action beyond the scope of this manual must be carried out only by qualified personnel authorized by the manufacturer.

It is assumed that all persons working with the humidification system Condair DL are familiar and comply with the appropriate regulations on work safety and the prevention of accidents.

The humidification system Condair DL may not be used by persons (including children) with reduced physical, sensory or mental abilities or persons with lacking experience and/or knowledge, unless they are supervised by a person responsible for their safety or they received instructions on how to operate the system.
Children must be supervised to make sure that they do not play with the humidification system Condair DL.

Intended use

The humidification system Condair DL is intended exclusively for **air humidification in AHU's or air ducts within the specified operating conditions** (see *Section 9.1*). Any other type of application, without the written consent of the manufacturer, is considered as not conforming with the intended purpose and may lead to the humidification system Condair DL becoming dangerous.
Operation of the equipment in the intended manner requires **that all the information contained in this operation manual are observed (in particular the safety instructions)**.

Danger that may arise from the humidification system Condair DL

DANGER!
Risk of electric shock!

The control unit of the Condair DL and the pump motor inside the central unit (if applicable) are mains powered. Live parts may be exposed when the control unit and/or the central unit is/are open. Touching live parts may cause severe injury or danger to life.

Prevention: Before carrying out any work on the components of the Condair DL take the system out of operation as described in *Section 4.5* and secure the system against inadvertent power-up.

Important: **The frequency converter in the control unit of systems with booster pump contains capacitors. These can remain charged with a potentially deadly voltage for a certain period of time after the control unit has been disconnected from the power supply. Therefore, wait at least 10 minutes after disconnecting the power supply. Then make sure the appropriate contacts on the frequency converter and the terminals on the pump motor are free of voltage before starting any work on these components!**

DANGER!
Health risk because of inadequate hygiene!

Inadequately operated and/or poorly maintained adiabatic humidification systems may endanger the health. When inadequately operated and/or poorly maintained micro-organisms (including the bacterium which causes Legionnaire's disease) may grow in the water system and in the area of the humidification unit and may affect the air in the AHU/air duct.

Prevention: The humidification system Condair DL must strictly be operated and maintained in accordance with this manual.

DANGER!
Risk of injury

Components that fall during work on the Condair DL can cause serious injuries.

Prevention: always wear a safety helmet when working on the Condair DL!

WARNING!
Risk of injury

The ceramic plates of the post-evaporation unit are porous and have partial sharp edges. You may injure your hands on this sharp edges or may injure your eyes by splintering ceramic parts when handling the ceramic plates.

Prevention: when handling the ceramic plates always wear protecting gloves and goggles.

Preventing unsafe operation

If it is suspected that **safe operation is no longer possible**, then the humidification system Condair DL should immediately **be shut down and secured against accidental power-up according to** *Section 4.5*. This can be the case under the following circumstances:

– if components of the humidification system Condair DL are not correctly positioned, locked or sealed
– if the humidification system Condair DL is damaged
– if the humidification system Condair DL is no longer operating correctly
– if connections and/or piping are not sealed
– if the electrical installations are damaged

All persons working with the humidification system Condair DL must report any alterations to the system that may affect safety to the owner without delay.

Prohibited modifications to the unit

No modifications must be undertaken on the humidification system Condair DL without the express written consent of the manufacturer.

For the replacement of defective components use exclusively **original accessories and spare parts** available from your Condair representative.

3 Product Overview

3.1 Models overview

The humidification system Condair DL is available in two base models (Type A: with booster pump, Type B: without booster pump) for different AHU sizes.

	Condair DL .	
	Type A (**with** booster pump)	**Type B** (**without** booster pump)
AHU inside width "W"	450 mm ... 8400 mm [1)]	
AHU inside height "H"	450 mm ... 4000 mm [1)]	
Humidification capacity	5 ... 1000 kg/hr (l/hr) [1)]	5 ... 1000 kg/h (l/hr) [1)]

[1)] Larger systems on request

Both base models can be extended with different options in their functionality. Furthermore, there are different accessories available.

3.2 Product designation / Which model do you have

The product designation and the most important unit data are found on the rating plates fixed on the right side of the control unit and the central unit. Please refer to the Condair DL installation manual for detailed information regarding the type plate and the product key.

3.3 Basic design the humidification system Condair DL

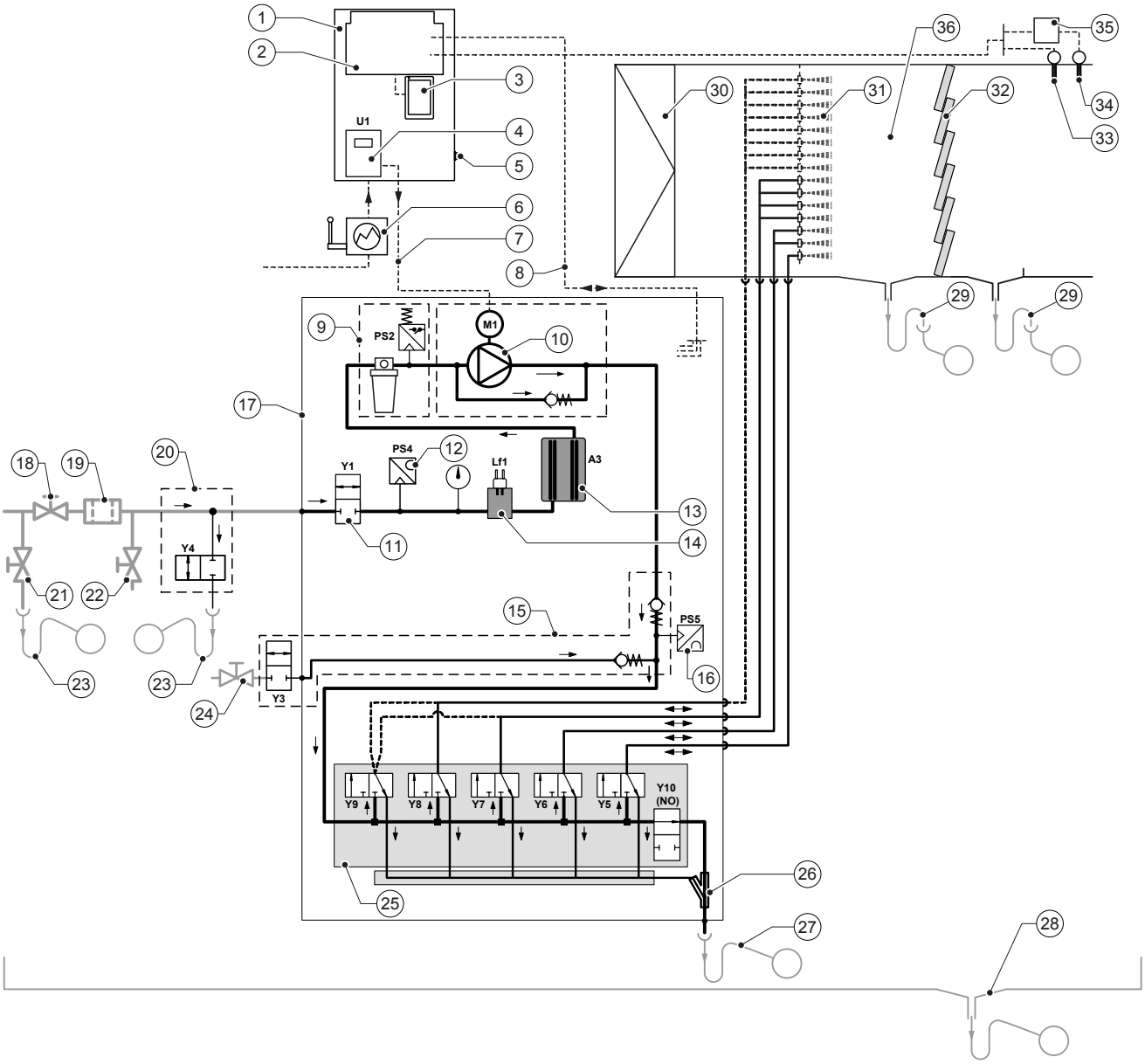

1 Control unit
2 Driver board
3 Integrated Controller (control board with touch screen)
4 Frequency converter for booster pump (Type A)
5 **<On/Off>** switch control unit
6 Mains supply via electrical isolator
7 Voltage supply booster pump motor
8 Cable harnesses sensors and valves
9 Option sterile filter with pressure switch PS2 (Type A) or without pressure switch PS2 (Type B)
10 Booster pump (Type A)
11 Inlet valve Y1
12 Pressure sensor inlet pressure PS4
13 Silver ionization A3
14 Conductivity sensor Lf1
15 Air cleaning (option)
16 Pressure sensor nozzle pressure PS5 (on systems Type B without optional sterile filter not present)
17 Central unit
18 Shut-off valve RO water supply (by others)
19 External water filter 5µm (recommended, option or by others)
20 External pipe flush (option)
21 Drain valve water supply pipe (by others)
22 Test valve, flame treatable (by others)
23 Funnel with trap (by others)
24 Shut-off valve pressured air supply (by others)
25 Valve manifold with spray nozzles Y5-Y9 and drain valve Y10
26 Water jet pump (spray circuits drain)
27 Drain with trap (by others)
28 Drain pan or floor drain with trap (by others)
29 AHU drains with trap (by others)
30 Air filter min. ISO ePM1 60% (F7/EU7) (by others)
31 Spray nozzles
32 Post-evaporation elements (porous ceramics)
33 Humidity sensor (by others)
34 Temperature- and humidity sensor (by others)
35 External continuous controller (by others, e.g., Enthalpy controller)
36 AHU

Fig. 1: Basic design of the humidification system Condair DL

3.4 Functional description

From the reverse-osmosis system (RO system) the fully demineralized water (also called RO water or permeate) is fed via a shut-off valve (18, by others) and a external water filter 5 µm (19, recommended, option or by others) to the central unit (17).

In the central unit the RO water is fed via the inlet valve Y1 (11), the conductivity sensor Lf1 (14), and the silver ionization (13) for disinfecting the water and the optional sterile filter (9) to the valve manifold (25) with the spray valves and the drain valve Y10.

On systems type A the central unit is equipped with a booster pump (10) (controlled via the frequency converter) which increases the water pressure to the required operating pressure of approximately 7-7.5 bar (yield load) starting from a certain humidity demand.

When a humidity demand is present the spray valves open depending on the demand:
- one or two spray valves (with 2 spray circuits: Y5-Y6),
- one, two or all three spray valves (with 3 spray circuits: Y5-Y7),
- one, two or all four spray valves (with 3 spray circuits with double stage: Y5-Y7+Y9) or
- one, two, three or all four spray valves (with 4 spray circuits: Y5-Y8) or
- one, two, three or all five spray valves (with 4 spray circuits with double stage: Y5-Y8+Y9) or
- one, two, three, four or all five spray valves (with 5 spray circuits: Y5-Y9).
- one, two, three, four or all six spray valves (with 5 spray circuits with double stage: Y5-Y9 + Y9.1).

The fully demineralized water is now fed to the respective spray nozzles (31) producing fine drops. The air passing by the nozzles absorbs the drop thus getting humidified. Drops not absorbed by the air is retained in the post-evaporation elements (32) thus humidifying the air passing through the post-evaporation elements. Excess water flows down to the bottom of the post-evaporation unit and is led via the trap (29) and open funnel to the wastewater line of the building.

Control

The system is controlled by an external controller (enthalpy controller recommended) or by the P/PI controller built into the control unit.

On systems:

- with 2 spray circuits a 3-step control is provided,
- with 3 spray circuits (with or without double stage) a 7-step control is provided,
- with 4 spray circuits (with or without double stage) a 15-step control is provided,
- with 5 spray circuits (with or without double stage) a 31-step control is provided

On systems type A the booster pump is switched on at a demand of approx. 60-70 % (switching point is dependent on the inlet pressure), and then the capacity is controlled continuously up to 100% via the pump speed.

Monitoring

The inlet pressure and the nozzle pressure are monitored with the analogue pressure sensors "PS4" and "PS5". On systems type B without booster pump and without optional sterile filter the nozzle pressure is equal to the inlet pressure, thus the pressure sensor "PS5" is not present.

The pressure after the optional sterile filter is monitored with the pressure switch "PS2" on systems type A (with booster pump), and on systems type B (without booster pump) with the pressure sensor "PS5" since the pressure after the sterile filter is equal to the nozzle pressure.

The conductivity of the fully demineralized water is continuously monitored. If the conductivity of the fully demineralized water exceeds the admissible range (max. 15 µS/cm), the drain valve Y10 on the valve manifold (25) opens and the water system is flushed until the conductivity meets the preset value. An error message is displayed or the system is stopped if the conductivity value does not reach the admissible range within a certain period (conductivity >100 µS/cm).

Hygiene function/Flushing

To prevent standing water, each spray circuit which is not active is emptied via the corresponding spray valve (the spray valves are connected to the drain in currentless status).

After 1 hour without humidification, the flushing valve opens to empty the system.

If the conductivity in the water supply line exceeds a preset value or if the humidification system has been without demand for more than 23 hours, the drain valve Y10 opens and the water supply line and the water lines in the central unit are flushed for a certain time with fresh RO water. During the flushing additionally residual water in the spray circuits is sucked out via the built-in water jet pump (26) and is led via the open funnel with trap (27) to the wastewater line of the building.

3.5 Hydraulic diagram

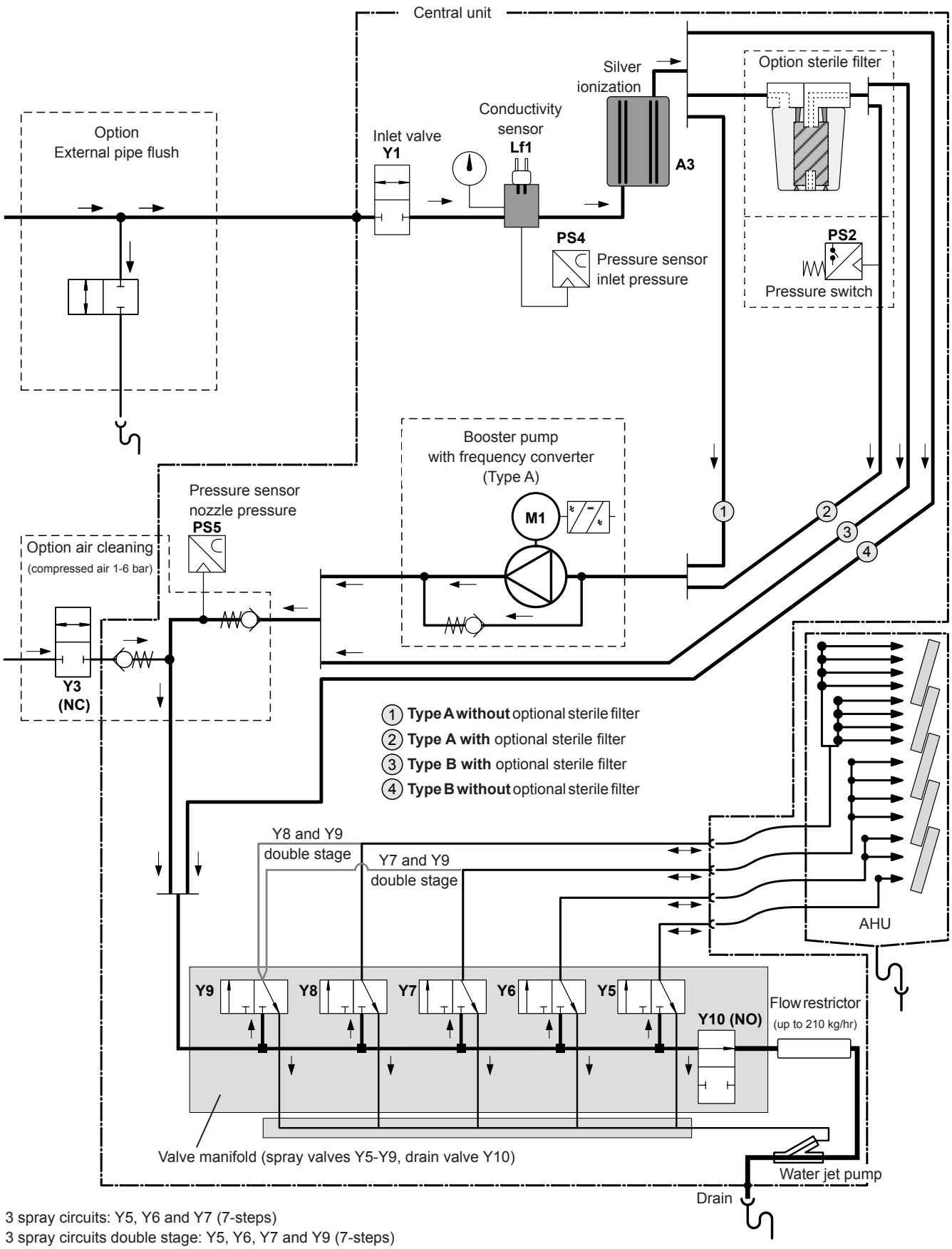

3 spray circuits: Y5, Y6 and Y7 (7-steps)
3 spray circuits double stage: Y5, Y6, Y7 and Y9 (7-steps)
4 spray circuits: Y5, Y6, Y7 and Y8 (15-steps)
4 spray circuits with double stage: Y5, Y6, Y7, Y8 and Y9 (15-steps)

Fig. 2: Hydraulic diagram humidification system Condair DL (Figure shows 15 steps control)

3.6 System overview Condair DL

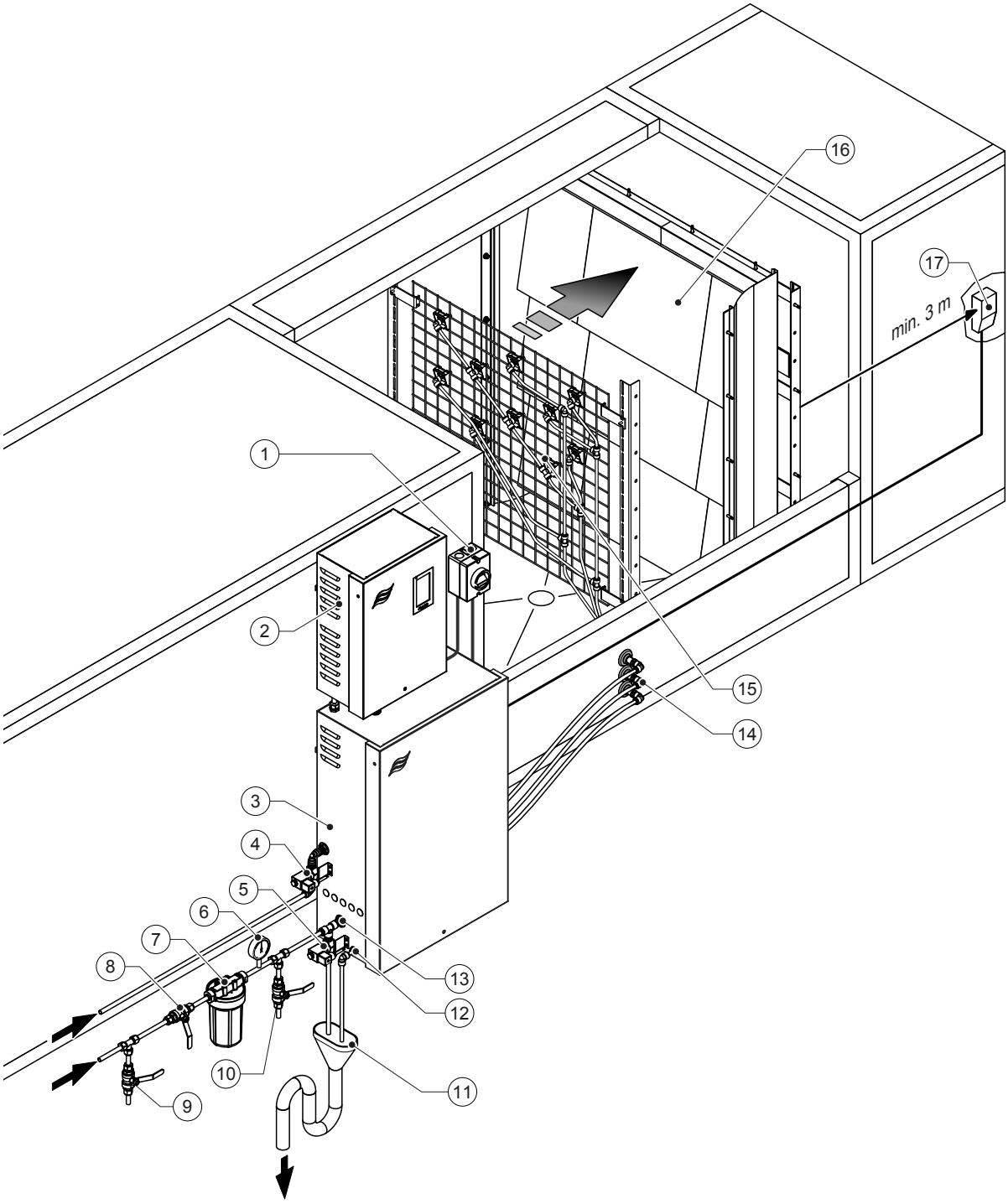

1 Electrical isolator mains supply
2 Control unit
3 Central unit
4 Valve air cleaning (option)
5 Valve external pipe flush (option) - plug-in coupling ø12 mm or 1/2" male thread adapter (supplied)
6 Manometer (recommended, by others)
7 External water filter 5µm (recommended, option or by others)
8 Shut-off valve water supply (mandatory, by others)
9 Drain valve water supply line
10 Test valve, flame treatable (recommended, by others)
11 Open funnel with trap (by others)
12 Water drain connector - plug-in coupling ø10 mm or 1/2" male thread adapter (supplied)
13 Water supply connector - plug-in coupling ø12 mm or 1/2" male thread adapter (supplied)
14 Wall feed throughs spray circuits (ø8/10 mm)
15 Grid with nozzles
16 Post-evaporation unit
17 Humidity controller (e.g., enthalpy controller) or humidity sensor (by others)

Fig. 3: System overview Condair DL

3.7 Overview humidification unit Condair DL

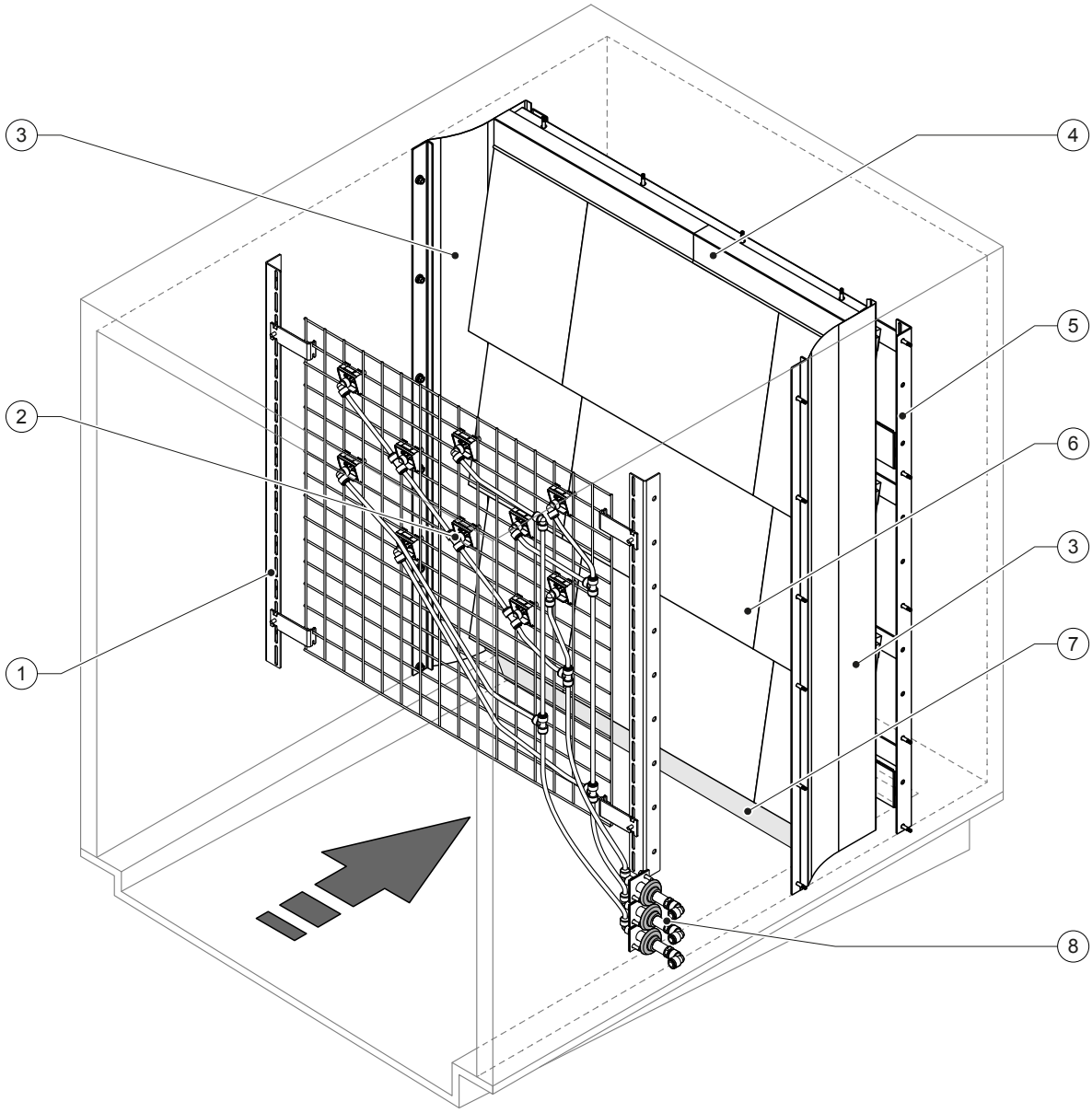

1 Support frame Nozzle unit
2 Spray nozzles
3 Lateral sealing plates
4 Upper sealing plates
5 Support frame post-evaporation unit
6 Ceramic plates
7 Bottom rubber sealing
8 Wall feed throughs spray circuits

Fig. 4: Overview Humidification unit Condair DL

3.8 Overview control unit Condair DL

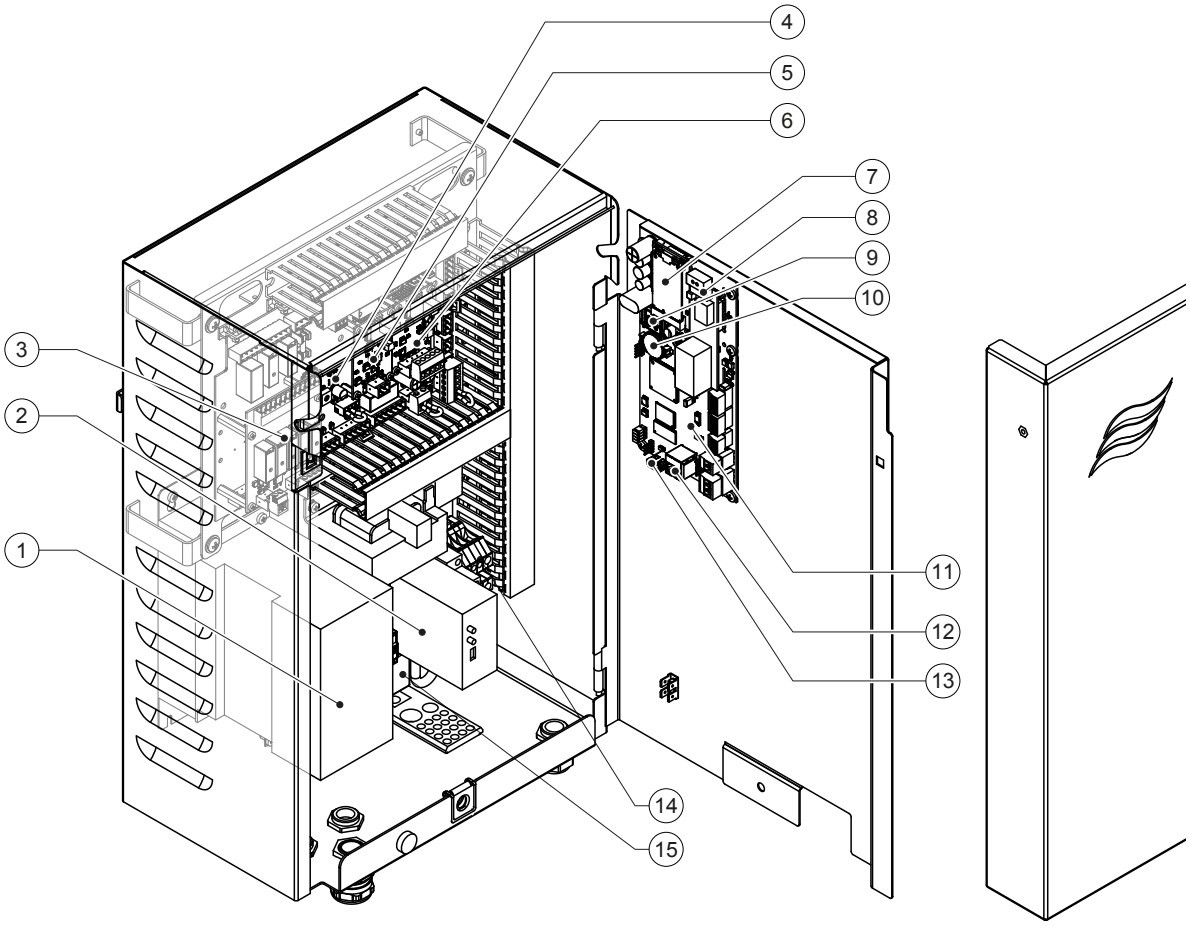

1 Frequency converter
2 Leak monitoring (option)
3 Remote operating and fault indication board
4 Driver board
5 Ag-Ionization board
6 Conductivity monitoring board
7 IoT Mobile Module (option)
8 Gateway board (option LonWorks, BACnet IP or BACnet MS/TP)
9 Smartcard
10 Back-up battery (CR 2032, 3V)
11 Integrated Controller (control board with touch screen)
12 RJ45 connector (ethernet interface)
13 USB connector
14 Terminals mains voltage supply
15 Snap ferrite mains voltage supply

Fig. 5: Overview control unit Condair DL (without internal cabling)

3.9 Overview central unit Condair DL

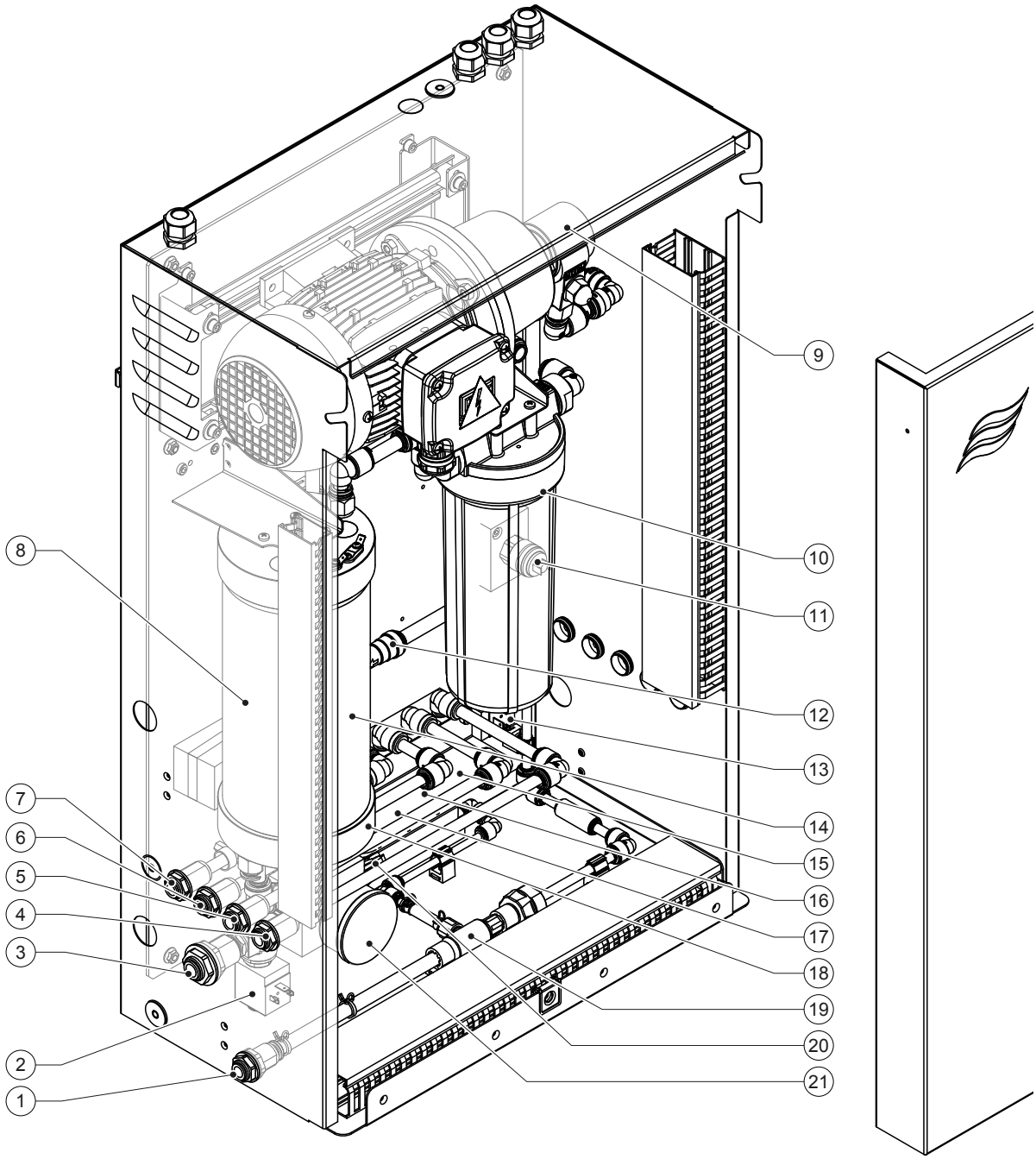

1 Water drain connector - plug-in coupling ø10 mm or 1/2" male thread adapter (supplied)
2 Inlet valve
3 Water supply connector - plug-in coupling ø12 mm or 1/2" male thread adapter (supplied)
4 Connector spray circuit 1 (Y5)
5 Connector spray circuit 2 (Y6)
6 Connector spray circuit 3 (Y7+Y9)
7 Connector spray circuit 4 (Y8+Y9)
8 Silver ionization cartridge
9 Booster pump (Type A only)
10 Sterile filter (option)
11 Pressure switch PS2 (Type A with sterile filter only)
12 Check valve (Type A only)
13 Drain valve Y10
14 Pressure sensor PS5
15 Spray valve Y5
16 Spray valve Y6
17 Spray valve Y7
18 Spray valve Y8
19 Water jet pump
20 Pressure sensor PS4
21 Manometer inlet pressure

Fig. 6: Overview central unit Condair DL

4 Operation

The humidification system Condair DL may be commissioned and operated only by persons familiar with the humidification system Condair DL and adequately qualified. It is the owner's responsibility to verify proper qualification of the personnel.

4.1 First-time commissioning

The first-time commissioning must always be done by a service technician of your Condair representative or a well-trained and authorized person of the customer. Therefore, the current manual does not provide detailed information on this procedure.

The following steps are carried out upon first-time commissioning in the specified order:

- Inspecting the humidification unit, the control unit and the central unit for correct installation.
- Inspecting the electrical installation
- Inspecting the water installation
- Flushing the water supply line and testing the water quality.
- Checking direction of rotation of the booster pump and adjusting the speed of the booster pump.
- Checking whether the spray circuits are connected to the corresponding nozzles and that all nozzles are spraying correctly.
- Configuring the control unit or the humidification system Condair DL, respectively.
- Carrying out test runs.
- Fill in the commissioning protocol.

4.2 Display and operating elements

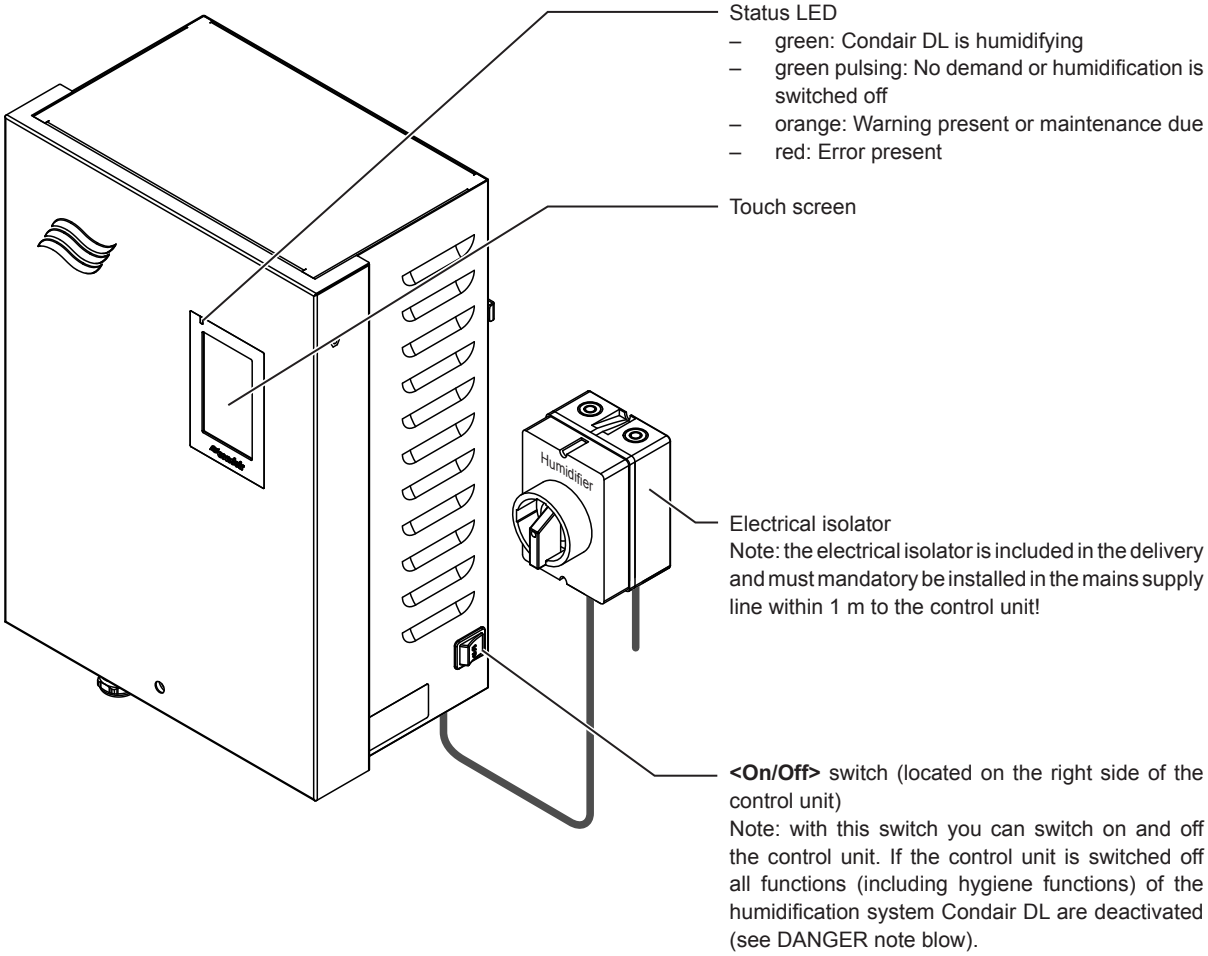

Status LED
- green: Condair DL is humidifying
- green pulsing: No demand or humidification is switched off
- orange: Warning present or maintenance due
- red: Error present

Touch screen

Electrical isolator
Note: the electrical isolator is included in the delivery and must mandatory be installed in the mains supply line within 1 m to the control unit!

<On/Off> switch (located on the right side of the control unit)
Note: with this switch you can switch on and off the control unit. If the control unit is switched off all functions (including hygiene functions) of the humidification system Condair DL are deactivated (see DANGER note blow).

Fig. 7: Display and operating elements Condair DL

DANGER!
Risk of electric shock!

There is still mains voltage inside the control unit even when you switch off the control unit via the **<On/Off>** switch. Therefore, the **electrical isolator must be switched off before open the control unit**.

4.3 Recommissioning after interruption of operation

The following description outlines the recommissioning procedure after an interruption of the operation (e.g., after servicing the system). It is assumed that first-time commissioning has been carried out properly by the service technician of your Condair representative. Proceed as follows to prepare the humidification system Condair DL for operation:

1. Examine the system components and installations for possible damage.

   DANGER!

   Damaged systems or systems with damaged components or installations may present danger to human life or cause severe damage to material assets.
   Damaged systems and/or systems with damaged or faulty installations must not be operated.

2. Make sure the ceramic plates are correctly located and properly sealed.

   WARNING!

   An unsealed post-evaporation unit may lead to severe damage of material assets.
   Put the system into operation only if the ceramic plates are correctly positioned and the post-evaporation unit correctly sealed.

3. **Switch on the electrical isolator in the mains supply line** (mains supply to control unit).
4. If closed, open shut-off valve in the water supply line.
5. Switch on the control unit via the **<On/Off>** switch, and activate control unit via the external enable switch if necessary.
6. If the humidification system Condair DL has been disconnected from the mains for more than 48 hours the warning message W50 "Out of Commissioning" appears. If this is the case proceed as follows:
   - Switch off control unit via the **<On/Off>** switch.
   - Close shut-off valve in the water supply line.
   - Disconnect the water supply line from the connector on the central unit.
   - Lead the open end of the water supply line into open funnel of the waste water line of the building.
   - Open the shut-off valve in the water supply line and flush the supply line for at least 5 minutes. Close shut-off valve in the water supply line again. Reconnect the water supply line to the connector on the central unit and open the shut-off valve.
   - Switch on control unit via the **<On/Off>** switch.

   Note: After switching on the control unit the warning message W50 "Out of Commissioning" appears again. After 5 minutes, the Condair DL automatically flushes the water system and then goes into normal operating mode. The message is reset.
7. If the sterile filter has been replaced, deaerate the sterile filter as described in *Section 6.6*.

The humidification system Condair DL is now in **normal operating mode** and the **home screen** is shown in the display.
Note: Further information on the operation of the Condair DL control software can be found in *Section 5.*

4.4 Notes on operation

4.4.1 Important notes on operation

– For hygiene reasons the drain valve opens **every 23 hours for aprrox. 300 seconds** in standby mode in order to flush water supply line.

– Humidification is activated if the humidification request is above approx. 14 % (with 3 spray circuits) or above approx. 7 % (with 4 spray circuits), respectively.

4.4.2 Remote operating and fault indication

Via the relays on the operating and fault indication board the following error and device status are indicated:

Activated remote indication relay	**When?**
"Error"	An error is present, operation is stopped, or further operation is possible for a limited period of time only.
"Service"	One of the maintenance counters has elapsed. The corresponding maintenance must be performed.
"Running"	Demand present/humidification
"Unit on"	The humidification system is switched on and under voltage
"Furnace"	Not supported!

4.4.3 Inspections during operation

During operation the humidification system Condair DL must be inspected periodically. On this occasion check the following:

- the water systems for any leak.
- the components of the humidification system for correct installation and any damage.
- the electric installation for any damage.
- the display for whether a warning or error message is present.

If the inspection reveals any irregularities (e.g., leak, error indication) or any damaged components take the humidification system Condair DL out of operation as described in *Section 4.5*. Then, have the malfunction be corrected or the damaged component be replaced by a well-trained specialist or a service technician from your Condair representative.

4.4.4 Flushing of the internal water system

Note: if an error message is active flushing of the internal water system is not possible.

To perform a flushing of the internal water system, proceed as follows:

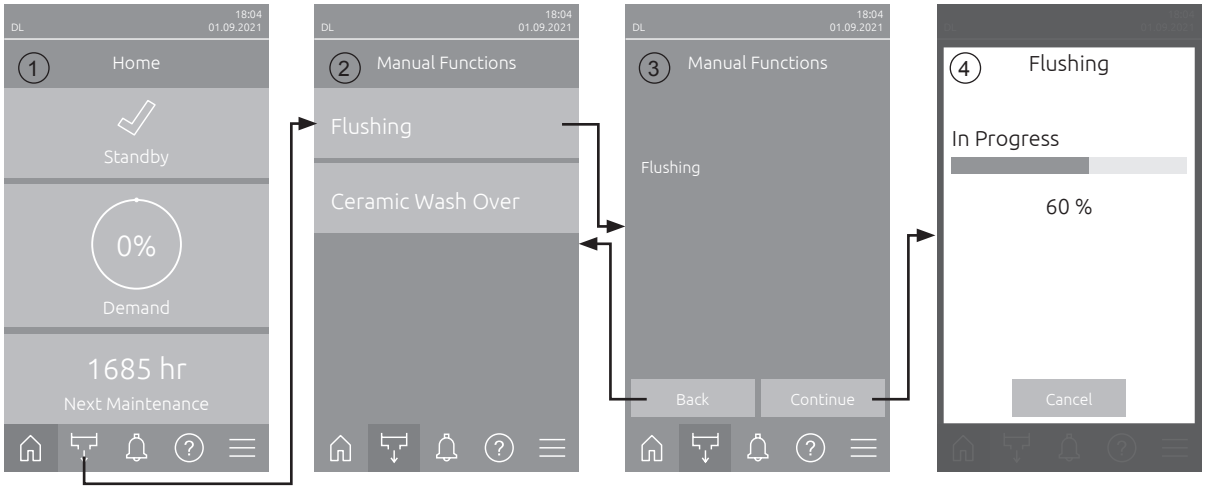

1. Press on the **<Manual Functions>** button in the home screen (1).
2. The "Manual Functions" submenu (2) appears. Here, press on the **<Flushing>** button.
3. The flushing confirmation display appears. Here, press on the **<Continue>** button to start the flushing of the water system.
   Note: A possible running humidification process is interrupted. If your system is equipped with the external pipe flush option, valve Y4 opens first, and the water supply line is flushed for a set period of time. Then, the inlet valve Y1 opens, and the internal water system of the central unit is flushed via the drain valve Y10 (normally open valve). If your system is equipped with the air cleaning option, finally valve Y3 opens and the spray circuits are blown out one after the other, assumed there is no humidity demand present and the safety loop and the external enable contact (if applicable) are closed.
4. The flushing progress display appears (4) and shows the current status of the flushing cycle. After flushing cycle has finished the home screen is shown again.

   In order to stop the flushing cycle, press the **<Cancel>** button in the flushing progress window. The flushing cycle is stopped, and the home screen is shown again.

4.4.5 Wash over of the ceramic plates

The ceramic wash over function is only accessible if the ceramic wash over function has been activated in the control software (see *Section 5.3.3.5*).

CAUTION!

During the ceramic wash over the nozzles spray water onto the ceramic plates, similar to when 100% demand is present. In systems with a booster pump, this also switches on.

This process must be monitored by the operator since the humidity can significantly exceed the desired setpoint. Over-saturation of the ceramic plates is likely.

After the ceramic wash over is complete, any water behind the ceramic plates must be removed if it cannot drain from there.

Note: if an error message is active flushing of the ceramic plates is not possible.

To perform a flushing of the ceramic plates, proceed as follows:

1. Press on the **<Manual Functions>** button in the home screen (1).
2. The "Manual Functions" submenu (2) appears. Here, press on the **<Ceramic Wash Over>** button.
3. The ceramic plate flushing confirmation display appears. Here, press on the **<Continue>** button to start the flushing of the ceramic plate.
   Note: When the ceramic wash over is started, all spray valves open for the set spray time (see *Section 5.3.3.5*) and spray water onto the ceramic elements as with a 100% demand. In systems with a booster pump, the booster pump is also activated with the set pressure (see *Section 5.3.3.5*).
4. The flushing progress display appears (4) and shows the current status of the ceramic plate flushing cycle. After flushing cycle has finished the home screen is shown again.

   In order to stop the ceramic plate flushing cycle, press the **<Cancel>** button in the flushing progress window. The flushing cycle is stopped, and the home screen is shown again.

4.5 Decommissioning the system

In order to take the humidification system Condair DL out of operation (e.g., to perform maintenance) perform the following steps:

1. Close the shut-off valve in the water supply line.
2. Switch off the control unit via the **<On/Off>** switch, and if applicable deactivate control unit via the external enable switch.
3. **Disconnect then control unit from the mains supply**: switch off electrical isolator in the mains supply line and secure electrical isolator in the "Off" position against accidentally switching on.

   DANGER!
   Risk of electric shock!

   The frequency converter in the control unit of systems with booster pump contains capacitors. These can remain charged with a potentially deadly voltage for a certain period of time after the control unit has been disconnected from the power supply. Therefore, wait at least 10 minutes after disconnecting the power supply. Then make sure the appropriate contacts on the frequency converter and the terminals on the pump motor are free of voltage before starting any work on these components!

4. **Mind hygiene! Let the fan of the ventilation system run** until the humidification unit is **dry**.
5. If work has to be carried out on the humidification unit switch off the AHU and secure the system against accidentally being switched on.

Important information on extended periods of non-use

Important! For reasons of hygiene, we basically recommend that the control unit and the supplying reverse osmosis system should be left switched on. With the system switched on, the water circuit is flushed at regular intervals to eliminate standing water and reduce the risk of contamination in the supply lines.

If the humidification system Condair DL is not be used for a longer period of time observe the following points:

– **Mind hygiene! Drain all water conduits**.
  Note: Regarding the emptying of the water supply line from the RO system please refer to the specifications of the manufacturer of the RO system.
– Remove the sterile filter, drain the water in the filter housing, dry filter housing and install a new filter cartridge.
– Drain the Ag ionization cartridge.
– For safety reasons the **post-evaporation elements should remain in their working position**, even if the humidifier is not used for an extended period. This prevents the water from being sprayed directly into the AHU duct in case the humidifier is powered up inadvertently.

5 Operating the Condair DL control software

5.1 Home screen

After switching on the control unit and the automatic system test the control unit is in **normal operating** mode and the **home screen** is shown.
Note: The appearance of the home screen depends on the current device and error status and the configuration of the humidity control of the system. It can deviate from the display shown below.

The home screen is structured as follows:

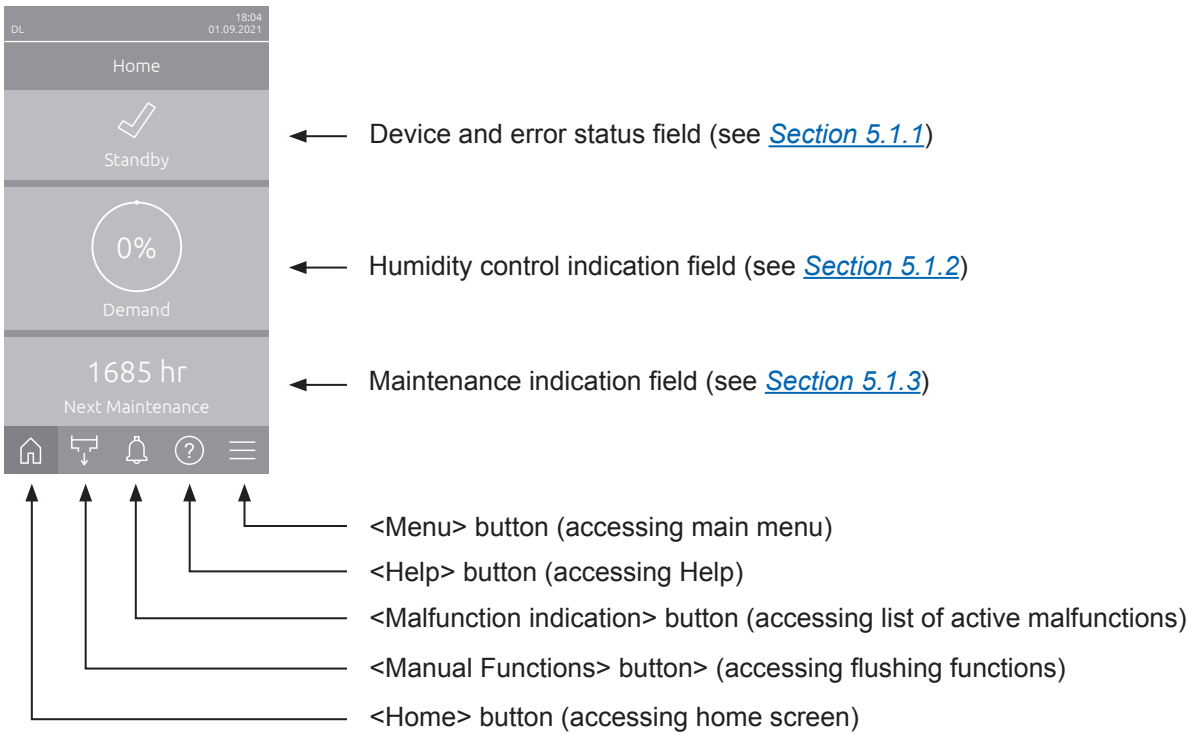

Fig. 8: Home screen

5.1.1 Device and error status indication field

If you press the device and error status field in the home screen, a window appears with further information on the device and error status.

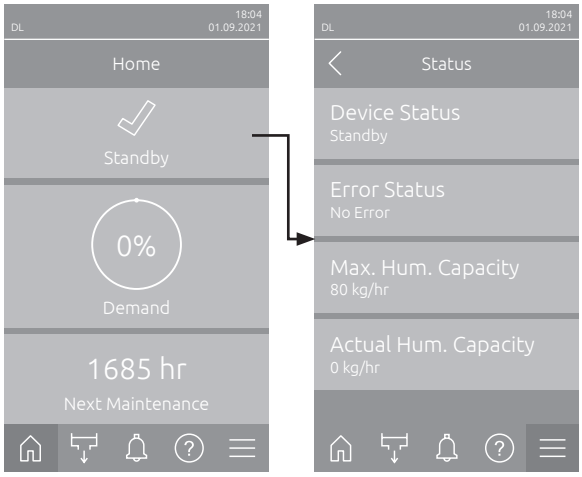

- **Device Status**: Shows the current device status.
- **Error Status**: Shows the current error status ("No Error", "Warning" or "Error").
- **Max. Hum. Capacity**: Shows the maximum humidification output of the Condair DL in kg/hr.
- **Actual Hum. Capacity**: Shows the current humidification output of the Condair DL in kg/hr.

The following error status symbols may be shown:

Error status symbol	Description
✓	The Condair DL works perfectly.
!	A malfunction with the status "Warning" has occurred.
✗	A malfunction with the status "Error" has occurred. Depending on the error, the operation of the Condair DL is stopped, or it continues to work to a limited extent.

The following device status indications may appear:

Device status	Description
Initializing	The control is initalising.
Stopped	The humidification system was stopped due to a malfunction that makes it impossible to continue operation.
Flushing	The water system is being flushed.
Standby	No humidity demand for more than 60 minutes the humidification system is in standby mode. The water system is flushed automatically for 120 seconds before the next humidification takes place
Humidifying	The humidification system is humidifying.
Ready	The humidification system is flushed and ready to humidify immediately if a demand is present.
Air Cleaning	The optional air cleaning is in progress.
Filling	The humidification system is filling and deaerating after water shortage has occured.
Conductivity Flush	The conductivity of the supply water is beyond of the admissible range, the water system is flushed automatically for a certain period of time
Switched Off	The humidification function is deactivated via the control software. The hygiene functions (regular flushing of the water system) remain still active.
Remote Off	The humidification system was stopped via the external enable switch.
Temperature Flush	The water temperature is too high or near the freezing point. The water system is flushed for a certain time.
Ceramic Wash Over	The optional ceramic wash over is carried out.

5.1.2 Humidity control indication field

If you press the humidity control indication field in the home screen, a window appears with further information on humidity control (control mode: "On/Off" or "Demand") or the setpoint input (control mode: "RH P" or "RH PI"), depending on the current control mode.

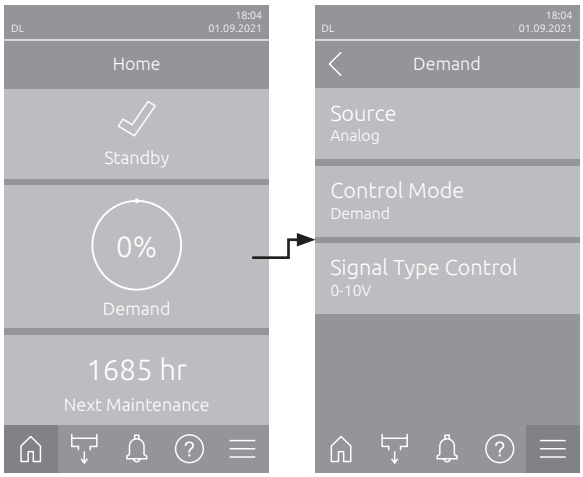

- **Source**: Shows the source of the control signal ("Analog", "Modbus", "BACnet" or "IoT").
- **Control Mode**: Shows the current control mode ("On/Off", "Demand", "RH P" or "RH PI").
- **Signal Type Control**: Shows the control signal type used.
  Note: This setting only appears if the control mode is set to "Demand".

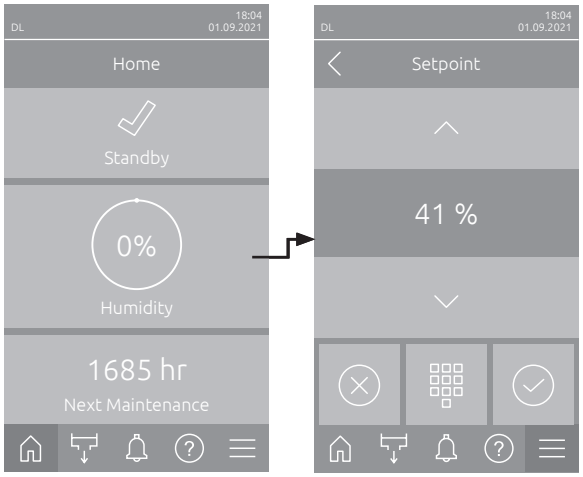

- **Setpoint**: Setting of the desired humidity setpoint value in %rH.

5.1.3 Maintenance indication field

If you press the Maintenance indication field in the home screen, a window appears with further information on maintenance.

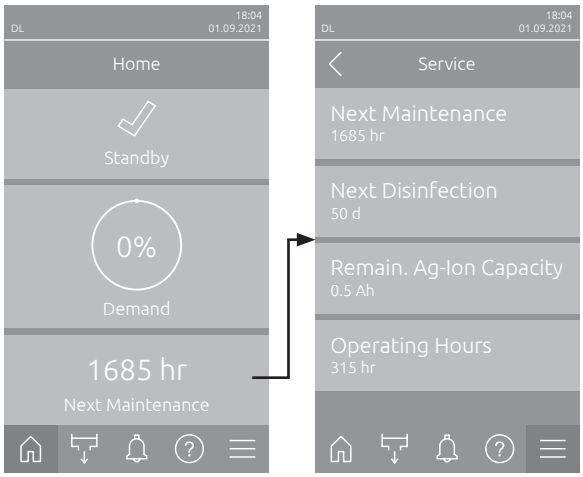

- **Next Maintenance**: Shows the remaining time in hours until the next system maintenance is due.
- **Next Disinfection**: Shows the remaining time in days until the next disinfection is due.
  Note: Only appears if the setting "Disinfection Timer" has been activated in the service level of the control software.
- **Remain. Ag-Ion Capacity**: Shows the remaining capacity of the silver cartridge in Ah until the next replacement is due.
- **Operating Hours**: Shows the number of operating hours since initial commissioning.

5.2 Information functions in the "Help" Menu

5.2.1 Acsessing the "Help" menu

Press the <Help> button in the home screen. The help menu with the contact details appears.

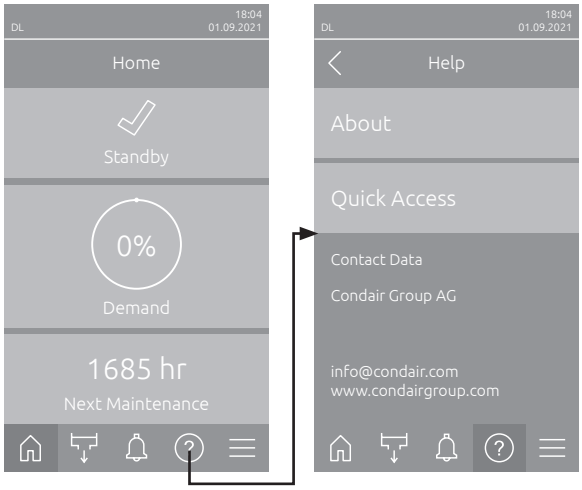

5.2.2 Query operating states in the "About" submenu

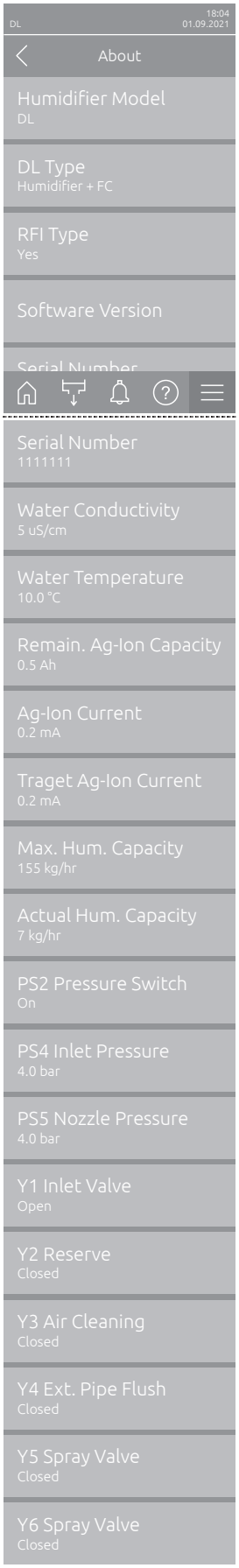

Continued on next page

- **Humidifier Model**: Name of the humidifier model.
- **DL Type**: Device type ("Humidifier"= Humidifier without booster pump, "Humidifier + FC"= Humidifier with booster pump, "Humidifier + FC - Off" (Humidifier with deactivated booster pump or frequency converter, respectively)).
- **RFI Type**: Shows whether the optional remote operating and fault indication board is installed and activated ("Yes") or not ("No").
- **Software Version**: Actual software versions of the Integrated Controller ("Device FW Version", "FrameWork FW Version" and "Bootloader FW Version") and driver boards ("Driver Board", "Condu. Board", "Ag-Ion Board" and "RFI Board").
- **Serial Number**: Serial number of the humidification system.
- **Water Conductivity**: Actual conductivity of the supply water in µS/cm. Note: During the periodical system flushings or if the system is empty the conductivity is displayed temporarily with 0 µS/cm. Always wait, until the system is humidifying, before you read the conductivity value!
- **Water Temperature**: Actual temperature of the supply water in °C. Note: This info field appears only if the "Water Temperature Monitoring" option is installed and activated in the service level of the control software.
- **Remain. Ag-Ion Capacity**: Remaining capacity of the silver cartridge in Ah.
- **Ag-Ion Current**: Actual current of the silver ionization in mA.
- **Target Ag-Ion Current**: Calculated nominal current for silver ionization in mA.
- **Max. Hum. Capacity**: Maximum humidification capacity in kg/hr.
- **Actual Hum. Capacity**: Actual humidification capacity in kg/hr.
- **PS2 Pressure Switch**: Actual status of the optional pressure switch PS2 when operating the humidification system Condair DL type A with sterile filter (On= pressure present, Off= no pressure present).
- **PS4 Inlet Pressure**: Actual water inlet pressure in bar.
- **PS5 Nozzle Pressure**: Actual atomization pressure of the water in bar (Type A with booster pump only).
- **Y1 Inlet Valve**: Actual operating status of the inlet valve "Y1".
- **Y2 Reserve**: no function.
- **Y3 Air Cleaning**: Actual operating status of the external valve "Y3" of the air cleaning option.
- **Y4 Ext. Pipe Flush**: Actual operating status of the external valve "Y4" of the external pipe flush option.
- **Y5 Spray Valve**: Actual operating status spray valve "Y5".
- **Y6 Spray Valve**: Actual operating status spray valve "Y6".

- **Y7 Spray Valve**: Actual operating status spray valve "Y7".
- **Y8 Spray Valve**: Actual operating status spray valve "Y8".
- **Y9 Spray Valve**: Actual operating status spray valve "Y9".
- **Y10 Drain Valve**: Actual operating status drain valve (open when de-energized).
- **Y11 Aux. Outlet Valve**: Actual operating status optional auxiliary outlet valve (open when de-energized).
  Note: this info field appears only if the optional auxiliary outlet valve is installed and activated in the service level of the control software.

5.2.3 Quick access to setting parameters in the "Quick Access" submenu

Press the <Quick Access> button in the "Help" menu. Then enter the quick access number of the desired setting parameter. You will find this number in the top left corner in the setting window of the corresponding parameter. Confirm the entry and the setting dialog for the corresponding parameter appears.
Note: If the parameter is password protected, after entering the quick access number, the password "8808" must first be entered before the setting dialog for the parameter appears.

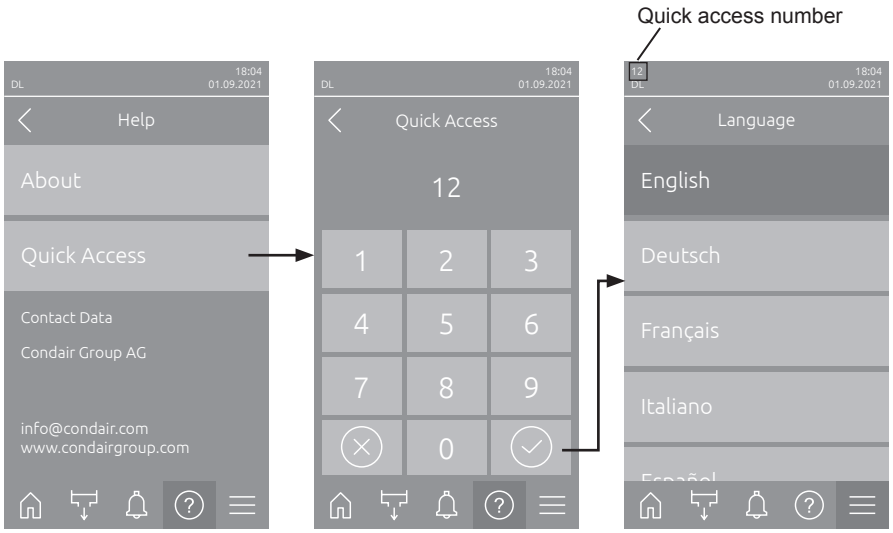

5.3 Configuration

5.3.1 Settings and features in the "General" submenu

5.3.1.1 Accessing the "General" submenu

Access the "General" submenu as shown below.

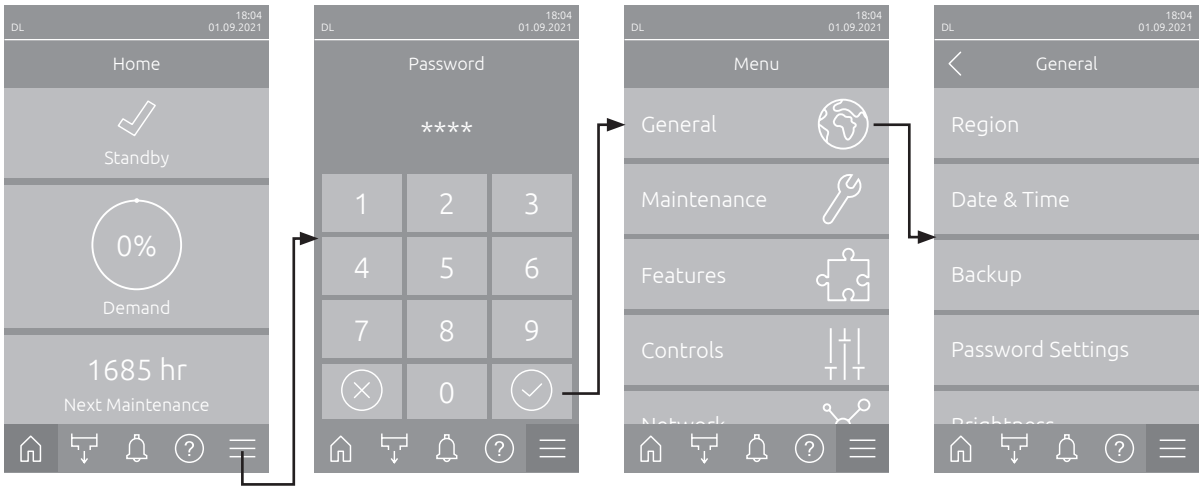

Password: **"8808"**

5.3.1.2 Determine language and system of units in the "Region" submenu

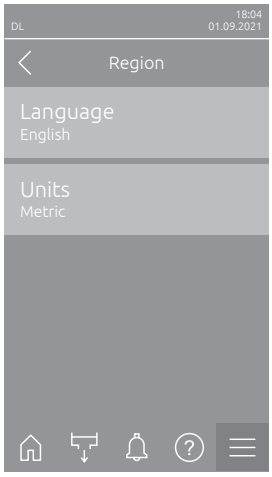

– **Language**: With this setting you determine the language.
  Factory setting: **depending on the country**
  Options: **different languages**

– **Units**: With this setting you determine the desired unit system.
  Factory setting: **depending on the country**
  Options: **Metric** or **Imperial**

5.3.1.3 Date and time settings in the "Date & Time" submenu

Note: The date and time must be entered correctly, as these are used for the entries in the malfunctions and maintenance history list.

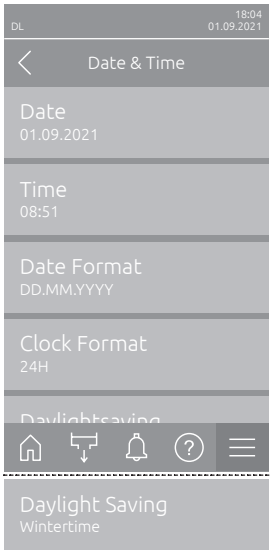

– **Date**: With this setting you determine the current date in the set format ("MM/DD/YYYY" or "DD.MM.YYYY").
  Factory setting: **01/01/2020**
– **Time**: With this setting you set the current hour of the day in the set time format ("12H" or "24H").
  Factory setting: **12**:**00**
– **Date Format**: With this setting you determine the desired date format.
  Factory setting: **DD.MM.YYYY**
  Options: **DD.MM.YYYY** or **MM/DD/YYYY**
– **Clock Format**: With this setting you determine the desired time format.
  Factory setting: **24H**
  Options: **24H** (24 hours, display 13:35) or
  12H (12 hours, display: 01:35 PM)
– **Daylight Saving**: With this setting you determine the daylight saving time summer time / winter time).
  Factory setting: **Wintertime**
  Options: **Summertime** or **Wintertime**

5.3.1.4 Read in parameter settings in the "Backup" submenu

– **Load Parameters from USB**: With this function you can read in parameter settings that were previously saved on a FAT32 formatted USB stick. To do this, the USB stick with the parameter settings must be inserted into the USB interface on the Integrated Controller. After pressing the selection field, a confirmation dialog appears in which you have to confirm the loading of the parameter settings again.

5.3.1.5 Activate/Deactivate password protection in the "Password Settings" submenu

– **Password Protection**: With this function you can protect the access to the main menu with the user password "**8808**" against unauthorized access ("On") or not ("Off").
  Factory setting: **On**
  Options: **Off** or **On**

5.3.1.6 Set the brightness of the touchscreen and the LED in the "Brightness" submenu

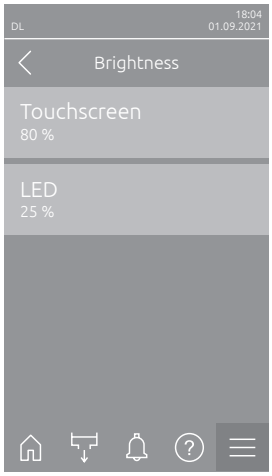

– **Touchscreen**: With this setting you determine the desired value for the display brightness.
  Factory setting: **80 %**
  Settings range: **15 ... 100 %**
– **LED**: With this setting you determine the desired value for the brightness of the status LED.
  Factory setting: **25 %**
  Settings range: **25 ... 100 %**

5.3.2 Settings and features in the "Maintenance" submenu

5.3.2.1 Accessing the "Maintenance" submenu

Access the "Maintenance" submenu as shown below.

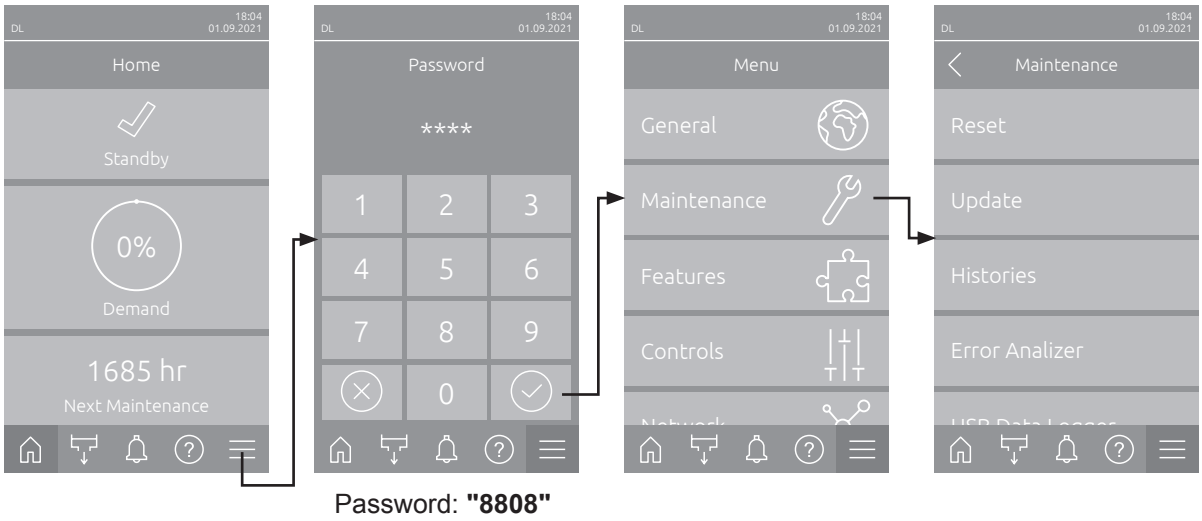

Password: **"8808"**

5.3.2.2 Reset functions in the "Reset" submenu

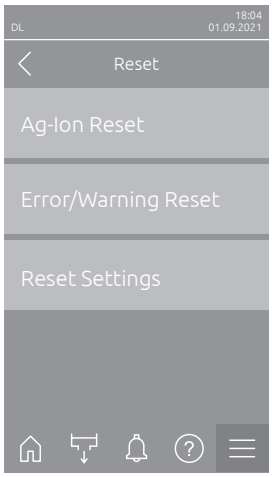

- **Ag-Ion Reset**: With this function you can reset the maintenance counter after replacing the silver cartridge. After pressing the selection field, a confirmation dialog appears in which you have to confirm the reset again
- **Error/Warning Reset**: With this function you can reset pending errors/ warnings after eliminating the malfunction(s). After pressing the selection field, a confirmation dialog appears in which you have to confirm the reset again. The Condair DL then restarts.
- **Reset Settings**: With this function you can reset the parameter setting values of the control software to the last saved values. After pressing the selection field, a confirmation dialog appears in which you have to confirm the reset again.

5.3.2.3 Software update in the "Update" submenu

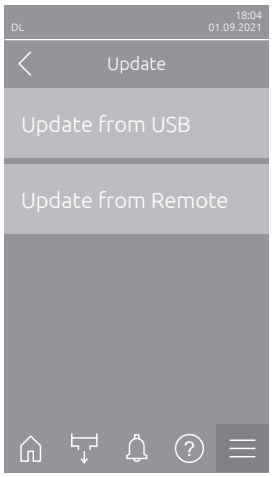

- **Update from USB**: With this function you can update the control software. The software is downloaded directly from the USB stick and then installed. Please note the information in *Section 6.8*.
- **Update from Remote**: With this function you can update the control software. The software must already be downloaded before the update can be started. Please note the information in *Section 6.8*.

5.3.2.4 View and export malfunctions and maintenance histories in the "Histories" submenu

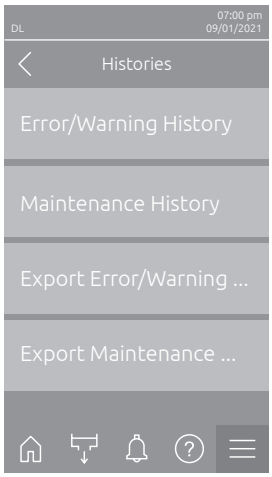

- **Error/Warning History**: With this function you can view the error and warning history list.
- **Maintenance History**: With this function you can view the maintenance history list.
- **Export Error/Warning History**: With this function you can save the error and warning history list on a USB stick.
  Note: Before you carry out this function, you must insert a FAT32 formatted USB stick into the USB interface on the Integrated Controller.
- **Export Maintenance History**: With this function you can save the maintenance history list on a USB stick.
  Note: Before you carry out this function, you must insert a FAT32 formatted USB stick into the USB interface on the Integrated Controller.

5.3.2.5 Load and export the error log file in the "Error Analyzer" submenu

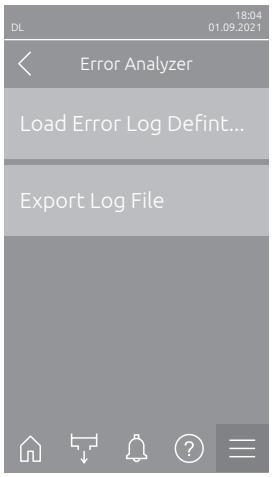

– **Load Error Log Definition** (carried out ex works): With this function you can load an "Error Log Definition file" available from Condair on a USB stick for recording malfunctions. Once the "Error Log Definition file" has been loaded, an error log file is created as soon as an error occurs during operation. This file can then be saved on a USB stick using the "Export Log File" function.
Note: Before you carry out this function, you must insert a USB stick with the "Error Log Definition" file into the USB interface on the Integrated Controller.

– **Export Log File**: With this function you can save an error log file created by the control on a USB stick and send it to Condair for further analysis.
Note: Before you carry out this function, you must insert a FAT32 formatted USB stick into the USB interface on the Integrated Controller.

5.3.2.6 Start operating data recording in the "USB Data Logger" submenu

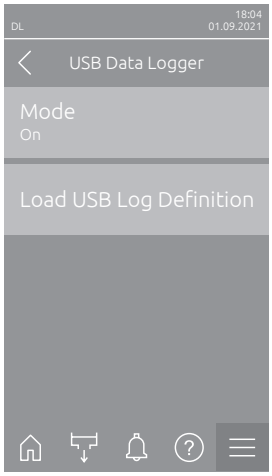

– **Mode**: With this function you can switch the operating data recording on a USB stick on or off. A new csv file is created for each day and stored on the USB stick.
Note: Before you carry out this function, you must insert a FAT32 formatted USB stick into the USB interface on the Integrated Controller.

Factory setting:	**Off**
Options:	**Off** or **On**

– **Load USB Log Definition** (carried out ex works): With this function you can load a "USB log Definition file" available from Condair on a USB stick. This file determines which parameters are recorded via the USB data logger as soon as data logging is started with the "Mode" parameter.
Note: Before you carry out this function, you must insert a USB stick with the "USB log Definition file" into the USB interface on the Integrated Controller.

5.3.2.7 View operating states in the submenu "Diagnostics > Input Diagnostics"

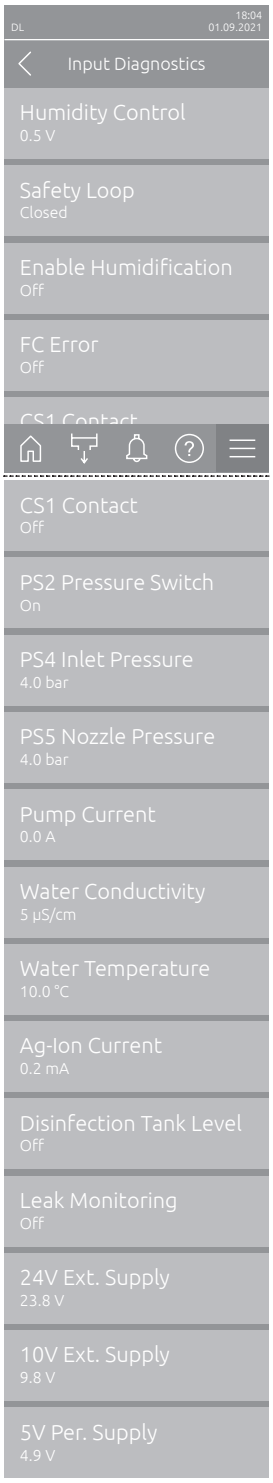

- **Humidity Control**: Shows the applied voltage signal at the input signal terminal "X16" between "HUM" and "GND".
- **Safety Loop**: Shows the current status of the safety loop.
- **Enable Humidification**: Enable signal present at X16 or not (Remote enable).
- **FC Error**: Is "On" when FC is switched on and no error is present. Contact drops out when the FC is switched off or there is an error at the FC.
- **CS1 Contact**: Status of the input for flushings.
- **PS2 Pressure switch**: Status of the pressure switch PS2 for sterile filter (only for systems with a sterile filter and pump).
- **PS4 Inlet Pressure**: Analog input of pressure sensor PS4 (inlet pressure).
- **PS5 Nozzle Pressure**: Analog input of pressure sensor PS5 (nozzle pressure).
- **Pump Current**: Current power consumption of the pump motor.
- **Water Conductivity**: Current conductivity of the inlet water in µS/cm.
- **Water Temperature**: Current temperature of the inlet water in °C.
- **Ag-Ion Current**: Currently measured current of the silver ionization.
- **Disinfection Tank Level**: Current level of the disinfection tank.
- **Leak Monitoring**: Current status of the leak monitoring.
- **24V Ext. Supply**: Effective voltage of the 24 V DC supply.
- **10V Ext. Supply**: Effective voltage of the 10 V DC supply.
- **5V Per. Supply**: Effective voltage of the 5 V DC supply.

5.3.2.8 Checking the relays of the remote operating and fault indication board in the "Diagnostics > RFI Diagnostics" submenu

Note: This submenu is only accessible if the remote operating and fault indication board has been installed and activated in the service level of the control software.

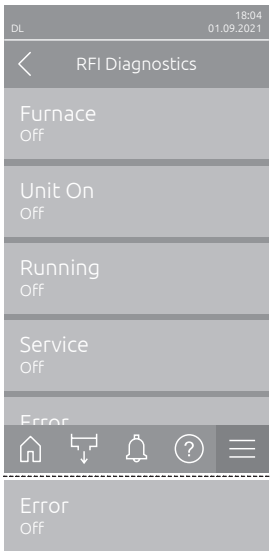

- **Furnace**: Activation and deactivation of the "Furnace" relay.
- **Unit On**: Activation and deactivation of the "Unit On" relay.
- **Running**: Activation and deactivation of the "Running" relay.
- **Service**: Activation and deactivation of the "Service" relay.
- **Error**: Activation and deactivation of the "Error" relay.

5.3.3 Settings and features in the "Features"

5.3.3.1 Accessing the "Features" submenu

Access the "Features" submenu as shown below.

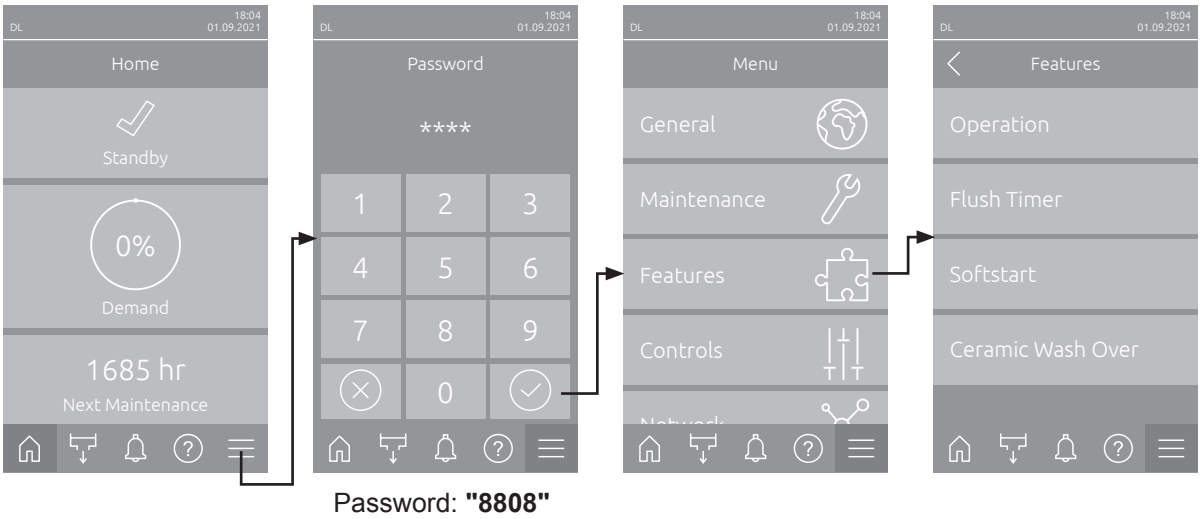

Password: **"8808"**

5.3.3.2 Set the power limitation in the "Operation" submenu

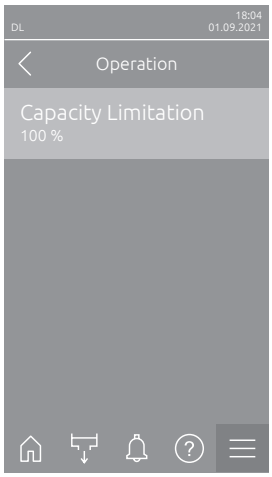

– **Capacity Limitation**: with this setting you determine the capacity limitation in relation to maximum capacity in %.

  Factory setting: **100 %**

  Setting range: **20 ... 100 %**

5.3.3.3 Set the flush timer in the "Flush Timer" submenu

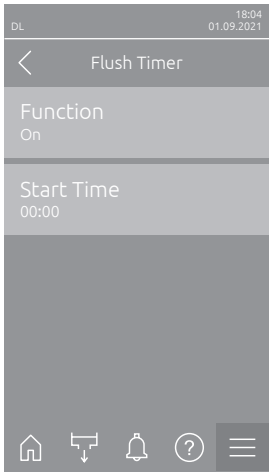

– **Function**: with this setting you can activate ("On") or deactivate ("Off") the timer-controlled flushing of the water system.
  Note: during the timer-controlled flushing of the water system, first the water supply line is flushed via the external pipe flush valve Y4, assumed your system is equipped with the external pipe flush option. Then, the inlet valve Y1 opens and the internal water system of the central unit is flushed via the drain valve Y10 (normally open valve). Finally, the air cleaning valve Y3 opens, and the spray circuits are blown out one after the other, assumed your system is equipped with the air cleaning option.

  Factory setting: **Off**

  Optional settings: **Off** or **On**

– **Start Time**: with this setting you determine the time of day, at which the timer-controlled flushing of the water system is to be carried out.
  Note: if at the point in time, on which the timer-controlled flushing is to be carried out, a humidification is in progress, the flushing is omitted.

  Factory setting: **00**:**00**

  Optional settings: **00**:**00** to **23**:**59**

5.3.3.4 Activate/deactivate the softstart function in the "Softstart" submenu

– **Softstart**: With this setting you activate ("On") or deactivate ("Off") the softstart function.
  Note: The softstart function limits the amount of water sprayed by 50% for 10 minutes when the Condair DL starts humidifying again, provided the Condair DL has not humidified for more than 30 minutes (factory setting).

  Factory setting: **Off**

  Optional settings: **Off** or **On**

5.3.3.5 Activate/deactivate the ceramic wash over function in the "Ceramic Wash Over" submenu

CAUTION!

During the ceramic wash over the nozzles spray water onto the ceramic plates, similar to when 100% demand is present. In systems with a booster pump, this also switches on.

This process must be monitored by the operator since the humidity can significantly exceed the desired setpoint. Over-saturation of the ceramic plates is likely.

After the ceramic wash over is complete, any water behind the ceramic plates must be removed if it cannot drain from there.

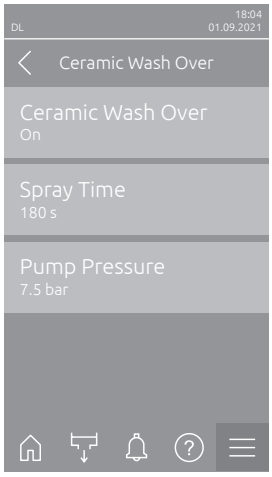

– **Ceramic Wash Over**: With this setting you activate ("On") or deactivate ("Off") the ceramic wash over function. Only when the ceramic wash over function has been activated, ceramic wash over can be started using the "Manual Functions" button and then the "Ceramic Wash Over" function.

  Factory setting: **Off**

  Optional settings: **Off** or **On**

– **Spray Time**: With this setting you determine the duration of the ceramic wah over in seconds.

  Factory setting: **180 s**

  Setting range: **1 ... 900 s**

– **Pump Pressure**: With this setting you determine the pump pressure in bar with which the booster pump provides during ceramic flushing.

  Factory setting: **7.5 bar**

  Setting range: **4.0 ... 9.0 bar**

5.3.4 Settings and features in the "Controls" submenu

In the "Controls" submenu you determine the control settings for the humidification system Condair DL. The control settings available depend on the selected signal source and the control mode.

5.3.4.1 Accessing the "Controls" submenu

Access the "Controls" submenu as shown below.

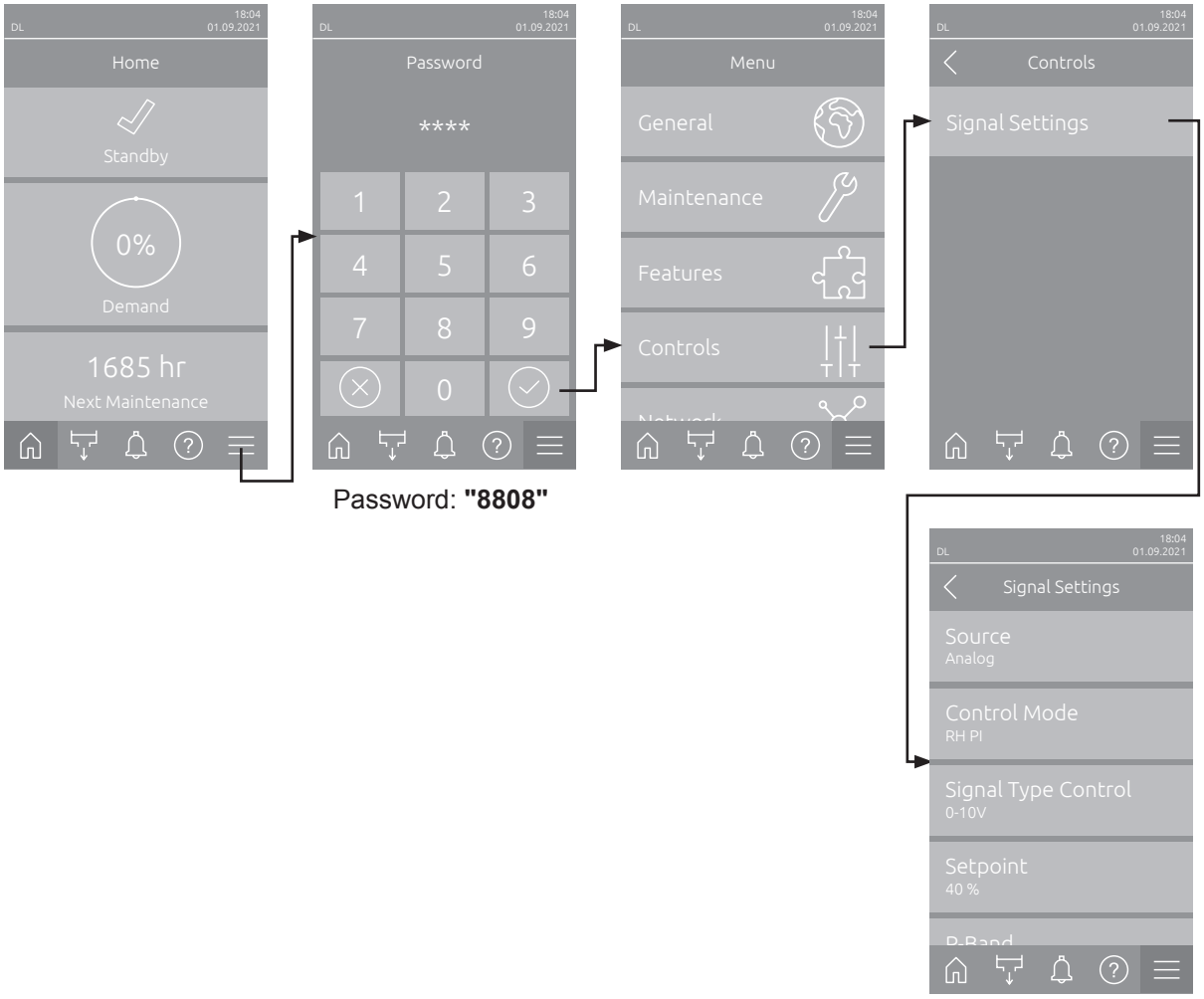

5.3.4.2 Control settings in the "Signal Settings" submenu

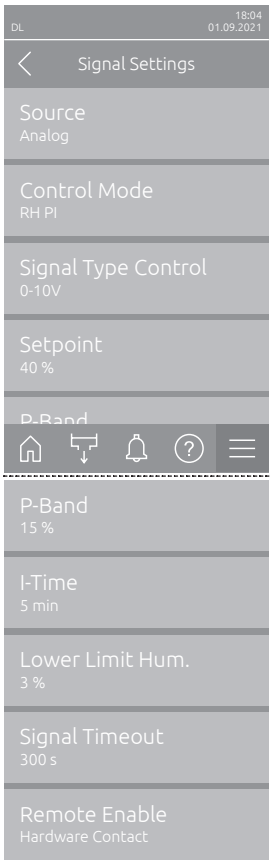

– **Source**: With this setting you determine whether the control signal comes from an analog source "Analog" (humidity sensor, demand signal from an external humidity controller), a BMS (building management system) via "Modbus", "BACnet" or via "IoT".

  Factory setting: **Analog**

  Options: **Analog** (Analog sensor-/humidity signal)
  Modbus (Signal via Modbus)
  BACnet (Signal via BACnet)
  IoT (Signal via IoT)

– **Control Mode**: with this setting you determine the type of controller used with the humidification system Condair DL.

  Factory setting: **Demand**

  Options: **On/Off** (external On/Off humidistat)
  Demand (external continuous controller)
  RH P (internal P controller)
  RH PI (internal PI controller)

– **Signal Type Control**: with this setting you determine the control signal with which the humidification system is controlled.
  Note: this setting appears only if "Source" is set to "Analog" and "Control Mode" is set to "Demand", "RH P" or "RH PI".

  Factory setting: **0-10 V**

  Options: **0-5 V, 1-5 V**, **0-10 V**, **2-10 V**, **0-16 V**, **3.2-16 V**, **0-20 V, 4-20 V, 0-20mA**, **4-20mA**

– **Setpoint**: with this setting you set the humidity setpoint for the internal P/PI controller in % relative humidity.
  Note: this setting appears only if the "Control Mode" is set to "RH P" or "RH PI".

  Factory setting: **40 %rh**

  Options: **5 ... 95 %rh**

– **P-Band**: with this setting you set the proportional range for the internal P/PI controller in % relative humidity.
  Note: this setting appears only if the "Control Mode" is set to "RH P" or "RH PI".

  Factory setting: **15 %rh**

  Options: **6 ... 65 %rh**

– **I-Time**: with this setting you set the integral time for the internal P/PI controller.
  Note: this setting appears only if the "Control Mode" is set to "RH PI".

  Factory setting: **5 minutes**

  Options: **1 ... 60 minutes**

– **Lower Limit Hum.**: With this setting you set the minimum signal value in % of the maximum signal value of the humidity sensor, if undershot a sensor interruption message (Error "E32") is triggered.
Note: this setting appears only if the "Control Mode" is set to "RH P" or "RH PI".

Factory setting: **3 %**
Options: **0.0 ... 10.0 %**

– **Signal Timeout**: This menu item only appears if the signal source is set to "Modbus", "BACnet" or "IoT". Information on this parameter can be found in the separate Modbus, BACnet or IoT addendum manual.

– **Remote Enable**: This setting you determine the source for the remote enable function. If the remote enable function is set to "Off" the humidifier can be started without a remote enable signal. If the remote enable function is set to "Hardware Contact", "Modbus" or "BACnet" the humidifier will only start when it receives an enable signal from the selected source.

Factory setting: **Hardware Contact**
Options: **Off** (Remote enable is ignored)
Hardware Contact (Enabling via external enable contact connected to "X16" on the driver board)
Modbus (Enable signal via Modbus)
BACnet (Enable signal via BACnet)

5.3.5 Communication settings in the "Network" submenu

In the "Network" submenu you determine the parameters for digital communication protocols.

5.3.5.1 Accessing the "Network" submenu

Access the "Network" submenu as shown below.

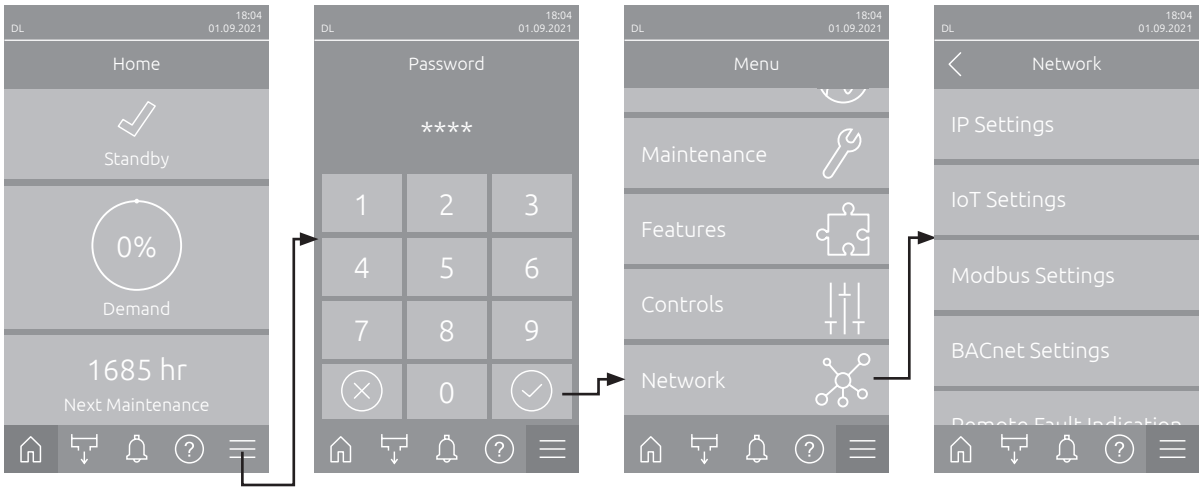

Password: **"8808"**

5.3.5.2 Settings in the "IP Settings" submenu

The following network settings are used only for the communication via the integrated BACnet IP, Modbus TCP or IoT interface.

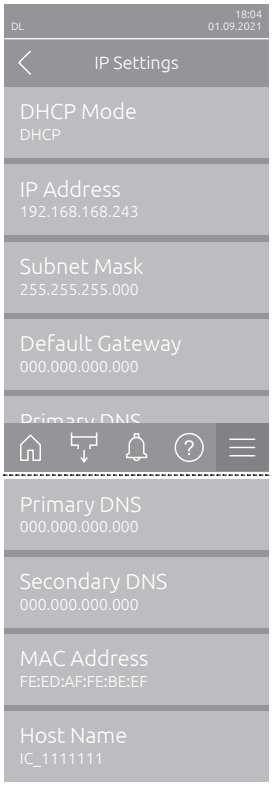

– **DHCP Mode**: with this setting you determine whether you want to assign the IP Address, the Subnet Mask, the Standard Gateway as well as the Primary and Secondary DNS address as fixed values or whether these should be dynamically assigned via a DHCP server.
Note: If no address can be assigned via a DHCP server when "DHCP Mode" is set to "DHCP", an APIPA (Automatic Private IP Addressing) is automatically assigned. This is in the range from 169.254.1.0 to 169.254.254.255. The subnet mask is set to 255.255.0.0 and the standard gateway remains 0.0.0.0.

  Factory setting: **DHCP**
  Options: **DHCP** (dynamic assignment)
  Fixed (fixed assignment)

– **IP Address**: This field shows the actual IP address of Condair DL assigned manually or assigned by a DHCP server.
If the parameter "DHCP Mode" is set to "Fixed", the IP address of Condair DL can be set via this field. If the parameter "DHCP Mode" is set to "DHCP", the IP address of Condair DL is assigned by a DHCP server.

– **Subnet Mask**: This field shows the actual subnet mask of the IP network assigned manually or assigned by a DHCP server.
If the parameter "DHCP Mode" is set to "Fixed", the subnet mask can be set via this field. If the parameter "DHCP Mode" is set to "DHCP", the subnet mask is assigned by a DHCP server.

– **Default Gateway**: This field shows the actual IP address of the default gateway assigned manually or assigned by a DHCP server.
If the parameter "DHCP Mode" is set to "Fixed", the IP address of the default gateway can be set via this field. If the parameter "DHCP Mode" is set to "DHCP", the IP address of the default gateway is assigned by a DHCP server.

– **Primary DNS**: This field shows the actual IP address of the primary domain name server (DNS) assigned manually or assigned by a DHCP server.
If the parameter "DHCP Mode" is set to "Fixed", the IP address of the primary domain name server can be set via this field. If the parameter "DHCP Mode" is set to "DHCP", the IP address of the primary domain name server is assigned by a DHCP server.

– **Secondary DNS**: This field shows the actual IP address of the secondary domain name server (DNS) assigned manually or assigned by a DHCP server.
If the parameter "DHCP Mode" is set to "Fixed", the IP address of the secondary domain name server can be set via this field. If the parameter "DHCP Mode" is set to "DHCP", the IP address of the secondary domain name server is assigned by a DHCP server.

– **MAC Address**: Factory set MAC Address (Media Access Control) of Condair DL. Not modifiable.

– **Host Name**: Host Name of Condair DL automatically generated by the control. Format: "IC_"+"Serial number of Condair DL". Not modifiable.

5.3.5.3 Settings in the "IoT Settings" submenu

The following settings are only required for communication via IoT.

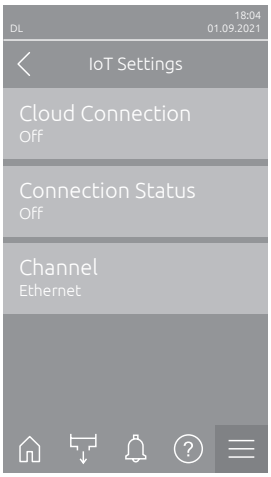

– **Cloud Connection**: not yet available!
– **Connections Status**: not yet available!
– **Channel**: not yet available!

5.3.5.4 Settings in the "Modbus Settings" submenu

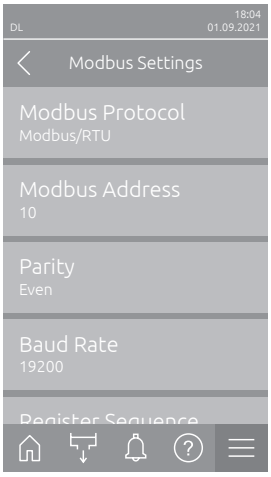

– **Modbus Protocol**: with this setting you can activate "**Modbus/RTU**" or "**Modbus/TCP**" communication via a Modbus network or deactivate ("Off") Modbus communication.

Factory setting:	**Modbus/RTU**
Options:	**Off**, **Modbus/RTU** or **Modbus/TCP**

Important: **regarding the setting of the individual Modbus parameters as well as the wiring of the Condair DL for the Modbus communication, please observe the instructions in the separate Modbus addendum manual. This manual can be requested from your Condair representative.**

5.3.5.5 Settings in the "BACnet Settings" submenu

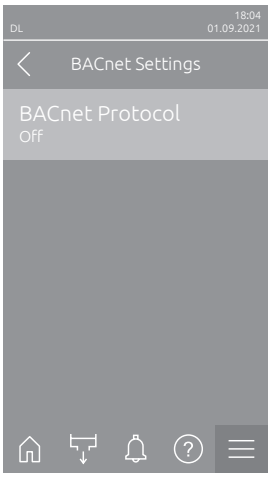

– **BACnet Protocol**: with this setting you can activate ("BACnet MS/TP" or "BACnet/IP") or deactivate ("Off") the communication via the integrated BACnet interfaces.

Factory setting:	**Off**
Options:	**Off** (BACnet interface deactivated)
	MS/TP Master (BACnet MS/TP Master via RS 485 interface)
	MS/TP Slave (BACnet MS/TP Slave via RS 485 interface)
	BACnet/IP (BACnet/IP via RJ45 interface)

Important: **regarding the setting of the individual BACnet parameters as well as the wiring of the Condair DL for the BACnet IP or BACnet MS/TP communication, please observe the instructions in the separate BACnet addendum manual. This manual can be requested from your Condair representative.**

5.3.5.6 Settings in the "Remote Fault Indication" submenu

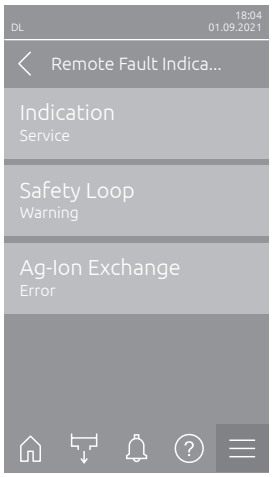

– **Indication**: With this setting you determine whether maintenance messages ("Service") only or all Warning messages ("Warning") are outputted via the service relay of the remote operating and fault indication board.
  Factory setting: **Service**
  Options: **Service** or **Warning**

– **Safety Loop**: With this setting you determine whether an Error ("Error") or a Warning ("Warning") is triggered when the external safety loop is open.
  Factory setting: **Warning**
  Options: **Warning** or **Error**

– **Ag-Ion Exchange**: With this setting you determine whether an Error ("Error") or a Warning ("Warning") is triggered when the capacity counter of the silver ionization cartridge has elapsed.
  Note: However, 7 days after the capacity counter of the silver ionization cartridge has elapsed always an error message is triggered.
  Factory setting: **Error**
  Options: **Error** or **Warning**

6 Maintenance and Replacement of components

6.1 Important notes on maintenance

Qualification of personnel

All maintenance work must be carried out only by **well qualified and trained personnel authorized by the owner**. It is the owner's responsibility to verify proper qualification of the personnel.

General notes

The instructions and details for maintenance work must be followed and upheld. Only carry out the maintenance work described in this documentation.

The humidification system Condair DL must be maintained in the prescribed intervals, the cleaning work must be carried out correctly.

Only use original spare parts from your Condair representative to replace defective parts or parts which have exceeded their lifetime.

Safety

DANGER!
Risk of electric shock!

Before carrying out any maintenance work take the humidification system Condair DL out of operation as described in *Section 4.5* **and secure the system against inadvertent power-up.** In addition, take AHU out of operation as described in the operations instructions of the AHU and secure the AHU against inadvertent power-up.

CAUTION!

The electronic components inside the control unit are very sensitive to electrostatic discharge.

Prevention: Before carrying out any maintenance work to the electrical or electronic equipment of the control unit, appropriate measures must be taken to protect the respective components against damage caused by electrostatic discharge (ESD protection).

DANGER!
Health risk by inadequate maintenance!

Inadequately operated and/or poorly maintained adiabatic humidification systems may endanger the health. When inadequately operated and/or poorly maintained micro-organisms (including the bacterium which causes Legionnaire's disease) may grow in the water system and in the area of the humidification unit and may affect the air in the AHU/air duct.

Prevention: The humidification system Condair DL must correctly be operated as described in *Section 4*, and must be correctly maintained and cleaned in the prescribed intervals as described in *Section 6*.

DANGER!
Risk of injury

Components that fall during work on the Condair DL can cause serious injuries.

Prevention: always wear a safety helmet when working on the Condair DL!

WARNING!
Risk of injury

The ceramic plates of the post-evaporation unit are porous and have partial sharp edges. You may injure your hands on this sharp edges or may injure your eyes by splintering ceramic parts when handling the ceramic plates.

Prevention: when handling the ceramic plates always wear protecting gloves and goggles.

6.2 Hygiene and Maintenance according to VDI 6022 Page 1

The humidification system Condair DL incorporates the very latest technology and has been designed to guarantee **hygienically trouble-free operation** when **operating conditions are observed**. The hygiene during operation was tested, proven and confirmed by the award of the **SGS-Fresenius Hygiene Certificate** following long-term tests at the Fresenius Institute.

To ensure operational safety and to guarantee hygiene in long-term operation, the **maintenance concept for the Condair DL** has been structured in **two stages**. This differentiates between **periodical checking** and the implementation of a **total system maintenance** of the Condair DL. In order to operate the system in accordance with the "Optimized air humidification DGUV" regulations, maintenance by Condair as specified in *Section 6* is required. Maintaining a Condair maintenance record is also mandatory.

Hygiene Service

For carrying out a total system maintenance your Condair representative offers maintenance contracts. The trained Condair service technicians have the necessary equipment and carry out the hygiene service following the most up to date factory approved procedures and guidelines. **For this purpose, please contact your Condair representative.**

6.2.1 Periodical checking

Periodical checking should be carried out **monthly** and include the following work:

Item	Work to be carried out
Nozzle system	– **Check the spray pattern of the atomizing nozzles during operation** (spray cone: 60° acceptable). Remove atomizing nozzles with uneven spray pattern and clean them (see total system maintenance). – **Check hoses and connections for sealing**, if necessary, replace defective components.
Post-evaporation unit	– **Check ceramic plates for damage**. Damaged plates should be replaced (see full servicing guide). **Note**: **A grey discolouration of the ceramic plates is normal. This is due to deposits from the silver ionization.**
Central unit	– **Silver ionization**: see detailed information in *Section 6.5*. – **Check hoses, connections, pressure sensors (PS4 and PS5), valves**, etc. in the central unit. Replace defective components where necessary. **Important**: **replace pressure sensors (PS4 and PS5) every 3 years.**
Humidifier housing/ Drain pan	– **Check the drain pan and humidifier housing for soiling** (Rust, slime, dust), clean if necessary (see total system service). – **Check the drain pan behind the post evaporation unit for collection of residual water**. If residual water is present, check the water drain and the post evaporation unit.

6.2.2 Total system maintenance

The frequency of the implementation of a total system maintenance depends on the operating conditions. The state of the humidifier‘s hygiene and its components mostly depends on the quality of the humidifier water, the performance (and the frequency of replacement) of the filter installed before the unit, the air velocity, the air temperature, and the microbiological and chemical composition of the inlet air.

The basic rule is: **when the "W28/E28 - Maintenance" message appears, or at least once a year, the implementation of a total system maintenance is obligatory.**

Resetting the "W28/E28 - Maintenance" message

Upon completion of the total system maintenance the **maintenance due message can be reset** using the service password via the "Reset" submenu (Path: "Menu > Service Password > Maintenance > Reset").

Item	Work to be carried out
Nozzle system	– **Check the spray pattern of the atomizing nozzles during operation** (spray cone: 60° acceptable). Remove spray nozzles with a poor spray pattern and clean them in an ultrasonic bath or with a household decalcifier. – **Check hoses and connections for sealing**, if necessary, replace defective components. – **Check spray nozzles for secure seating**. Slightly tighten loose nozzles by hand. – **Clean supporting structure, nozzle grid(s) and tubing with a combined detergent and disinfectant** (application in accordance with manufacturer data), finally rinse all components with hygienically pure water (RO water).
Post-evaporation unit	– If the the post-evaporation unit is not accessible for cleaning from the air outlet side, the ceramic plates must be removed. – **Check ceramic plates for damage**. Damaged plates must be replaced. – **Check ceramic plates for soiling**. Dust deposits are to be rinsed off with water. Ceramic plates, which cannot be cleaned any more, have to be replaced. **Note**: **A grey discolouration of the ceramic plates is normal. This is due to deposits from the silver ionization**. If the ceramic plates show severe deposits of dust, the ventilation system air filter should be checked for cracks, cleanliness, and filter quality (ISO ePM1 60% (F7/EU7) or better). Clean soiled plates. – **Clean supporting structure and sealing plates with a combined detergent and disinfectant** (application in accordance with manufacturer data), finally rinse all components with hygienically pure water (RO water). – **Check the supporting structure, the ceramic plates, the sealing plates for correct assembly and tight seating of screw connections**. If necessary, install faulty components correctly and tighten loose screw connections.
Central unit	– **Silver ionization**: observe notes in *Section 6.5* . – Clean filter housing of the optional sterile filter and replace filter cartridge. – **Check hoses, connections, pressure sensors (PS4 and PS5), valves**, etc. in the central unit. Replace defective components where necessary. **Important**: **Replace pressure sensors (PS4 and PS5) every 3 years.**

Item	Work to be carried out
Humidifier housing/ Drain pan	– **Check the drain pan behind the post evaporation unit for collection of residual water**. In the event of a substantial amount of residual water, check the water drain and post evaporation unit. Please note: drops of water and small pools of water in the water tray behind the post-evaporation unit are as a rule caused by the system. – **Clean the drain pan and humidifier housing (also clean behind the post evaporation unit) with a combined detergent and disinfectant**. Finally rinse all components with hygienically pure water (RO water) and rub dry.
Components installed upstream in the water supply line	– To ensure hygiene the components installed upstream in the water supply line (e.g., water filter, reverse-osmosis system, etc.) must be cleaned and maintained in accordance with the information of the manufacturer. **Important**: The water filter in the water supply line (if applicable) must be replaced at least once a year. The water filter must be replaced immediately if the water supply has been contaminated by a malfunction.
Electrical installation	– **Arrange for a qualified specialist to inspect connections and cables, fasten connecting terminals if required**. Defective installations must be rectified only by a qualified specialist.
Humidifier water	– **Determine the bacterial count at the water connection to the central unit**. In the event of **bacterial count** concentrations above the limit of 100 cfu/ml, the water supply/water pipes must be subject to a microbiological inspection and appropriate action must be taken immediately (please contact your Condair representative). **Bacterial count** concentrations in the upper area of the permitted range may be an indication of the onset of bacterial problems in the water supply. The water supply and water pipes should also be subject to a microbiological inspection.
System air	– **Determine the bacterial count in the supply air before the humidifier inlet.** In the event of **bacterial count** concentrations above the limit of 1000 cfu/m^3, the ventilation system must be subject to a microbiological inspection and appropriate action must be taken immediately to rectify the situation (please contact your Condair representative). **Bacterial count** concentrations in the upper area of the permitted range may be an indication of the onset of bacterial problems in the ventilation system. The ventilation system should also be subject to a microbiological inspection. – **Determine the bacterial count in the air at the humidifier outlet to confirm the hygienic function of the humidifier**.

6.3 Notes on cleaning and cleaning agents

For the cleaning of the individual system components of the Condair DL use a household cleaning and disinfection agent.

It is mandatory to observe and comply with the manufacturer's information and instructions of the cleaning agents used. Observe in particular: all information relating to the protection of personnel, environmental protection, and restrictions regarding usage.

CAUTION!

Do not use any **solvents, aromatic hydrocarbons or halogenized hydrocarbons or other aggressive substances** as they may cause damage to the components of the unit.

DANGER!

Do not use no cleaning agents, which leave poisonous residues. These can get in contact with the ambient air during operation and endanger the health of persons. In any case the components have to be thoroughly rinsed with RO water after cleaning.

6.4 Removal and installation of components

6.4.1 Removal and installation of the ceramic plates

DANGER!
Risk of injury

Components that fall during the removal and installation of the ceramic plates can cause serious injuries.

Prevention: always wear a safety helmet when removing and installing the ceramic plates!

WARNING!
Risk of injury

The ceramic plates of the post-evaporation unit are porous and have partial sharp edges. You may injure your hands on this sharp edges or may injure your eyes by splintering ceramic parts when handling the ceramic plates.

Prevention: when handling the cermaic plates always wear protecting gloves and goggles.

Removal of the ceramic plates

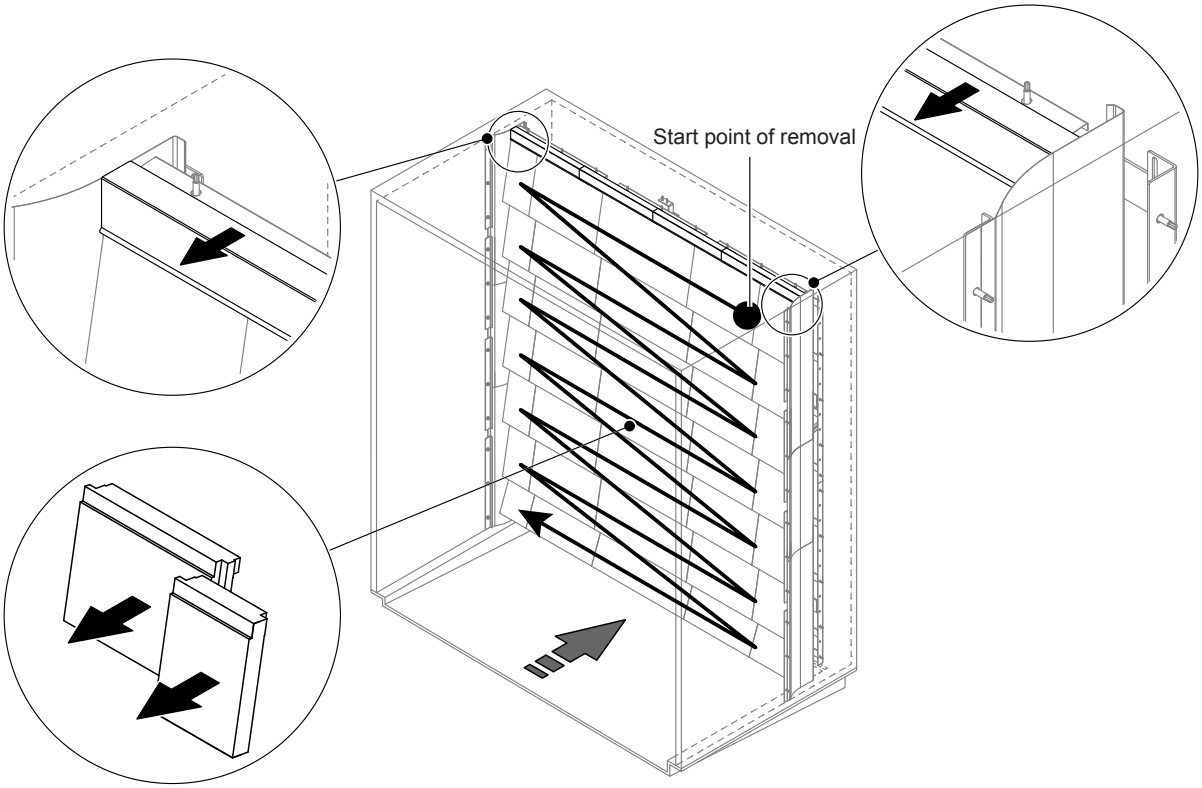

Fig. 9: Removal of the ceramic plates

Proceed as follows to remove the ceramic plates:

1. Remove upper sealing plates.
2. Start on top right and remove the ceramic plates from right to left.
   Important: mark position of the ceramic plates for correct re-assembly.
3. Repeat step 2 for all ceramic plate rows.

Installation of the ceramic plates

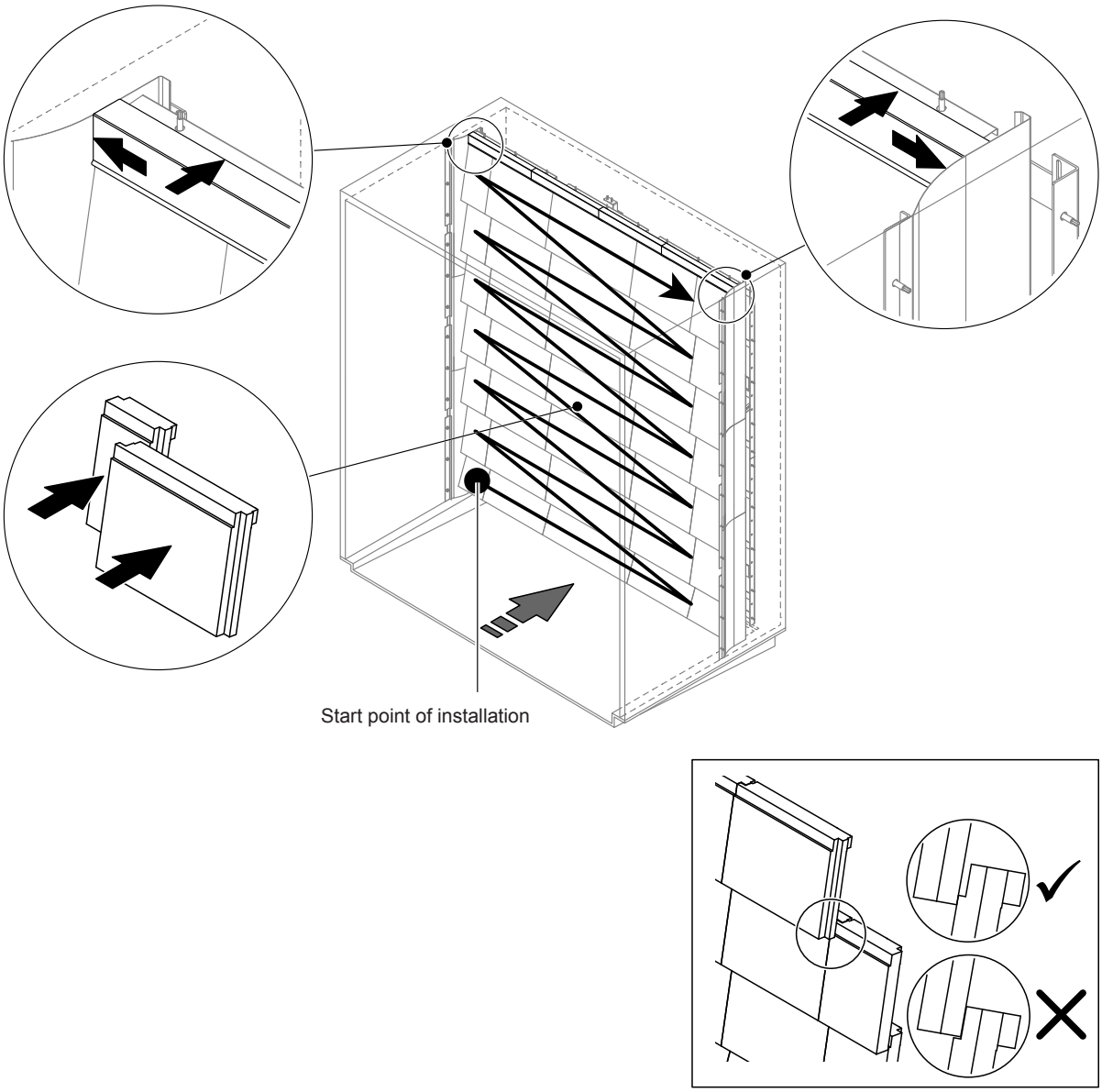

Fig. 10: Installation of the ceramic plates

Before installation, check all ceramic plates for possible damage. Damaged ceramic plates and ceramic angles **must not be reinstalled**.

For installation of the ceramic plates proceed in the reverse order of removal (also see section "Install ceramic plates" in the installation manual).
Important! Make sure to reinstall the ceramic plates in the appropriate locations and that the upper sealing plates on left and the right side are flush with the corresponding the lateral sealing plate.

6.4.2 Removal and installation of the spray nozzles

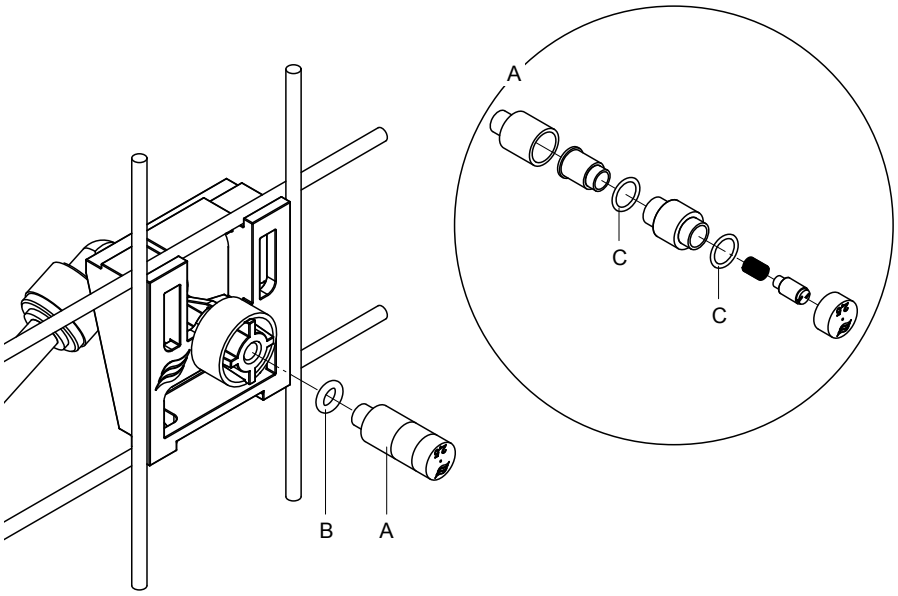

Fig. 11: Removal and installation of the spray nozzles

Removal of the spray nozzles

1. Loosen nozzle "A" by hand and remove it together with the O-ring"B".
   Note: prior to the removal note the position and the colour identification of the nozzle.
2. If necessary, disassemble the nozzle according to the illustration above.

Installation of the spray nozzles

1. Before installation, check nozzle "A" and o-rings "B" and "C" for any damage. **Damaged nozzles or damaged o-rings must be replaced.**
2. If necessary, assemble the nozzle according to the illustration above.
3. Before installation of the nozzle flush the corresponding spray circuit by activating the appropriate spray valve via the "Output Diagnostics" submenu.
4. Screw in cleaned or new nozzle with O-ring into the nozzle support and tighten it by hand until it comes to a stop (do not use tools).
   Note: make sure the nozzle is installed in the nozzle grid on the right place and with the correct orientation.

6.4.3 Removal and installation of the nozzle support

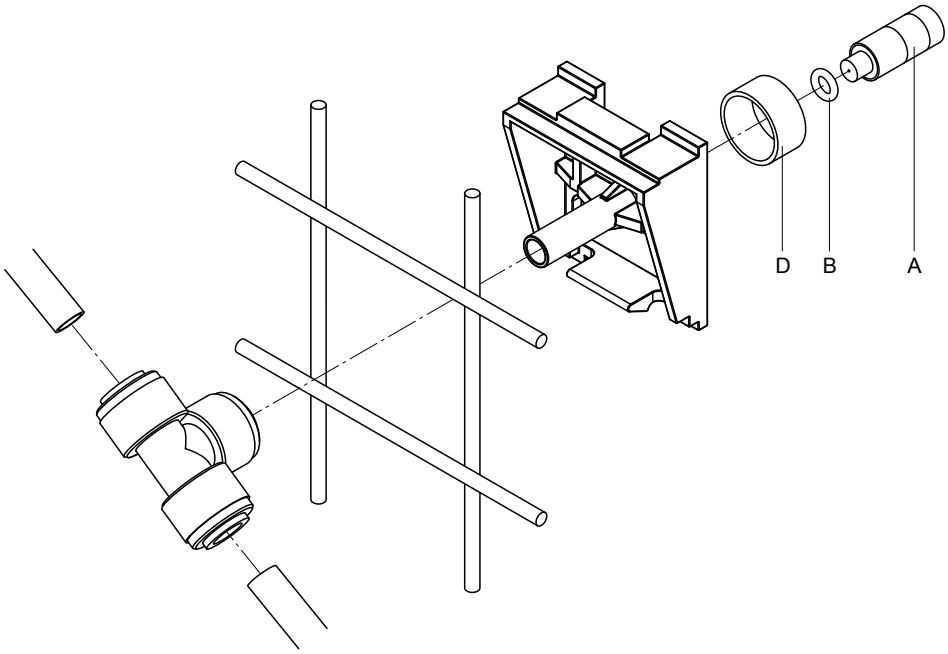

Fig. 12: Removal and installation of the nozzle support

Removal of the nozzle support

1. Remove nozzle"A" together with the O-ring "B" as described in *Section 6.4.2*.
2. Remove coloured ring "D" from the nozzle support.
3. Remove the hose(s) from the nozzle support (press the locking ring towards screw, then pull hose off).
4. Remove connection nipple (press the locking ring towards screw, then pull off nipple).
5. Squeeze the catch locks of the nozzle support and remove the support.
   Note: prior to the removal note the orientation of the nozzle support (straight, to the left, etc.).

Installation of the nozzle support

1. Before installation, check all parts (including O-rings) for any damage. **Damaged parts must be replaced**.
   Important! Before installation, flush water conduits with RO water.
2. The installation follows the reverse order of the removal.
   – Make sure the nozzle support is installed in the nozzle grid on the right place and with the correct orientation.
   – Following installation verify correct fastening of all hose connectors. Correctly mounted hoses cannot be removed without pressing the locking ring.

6.5 Replacement of the silver cartridge "Hygiene Plus"

If the silver cartridge is exhausted and needs to be replaced Error "55 - Ag-Ion Service" is shown. Via the "Service" relay and the "Error" relay on the remote operation and fault indication board, additionally a maintenance request and an error is issued.

If the silver cartridge is not replaced and the counter is **not reset within 7 days the humidification is stopped**.

Replacing the silver cartridge

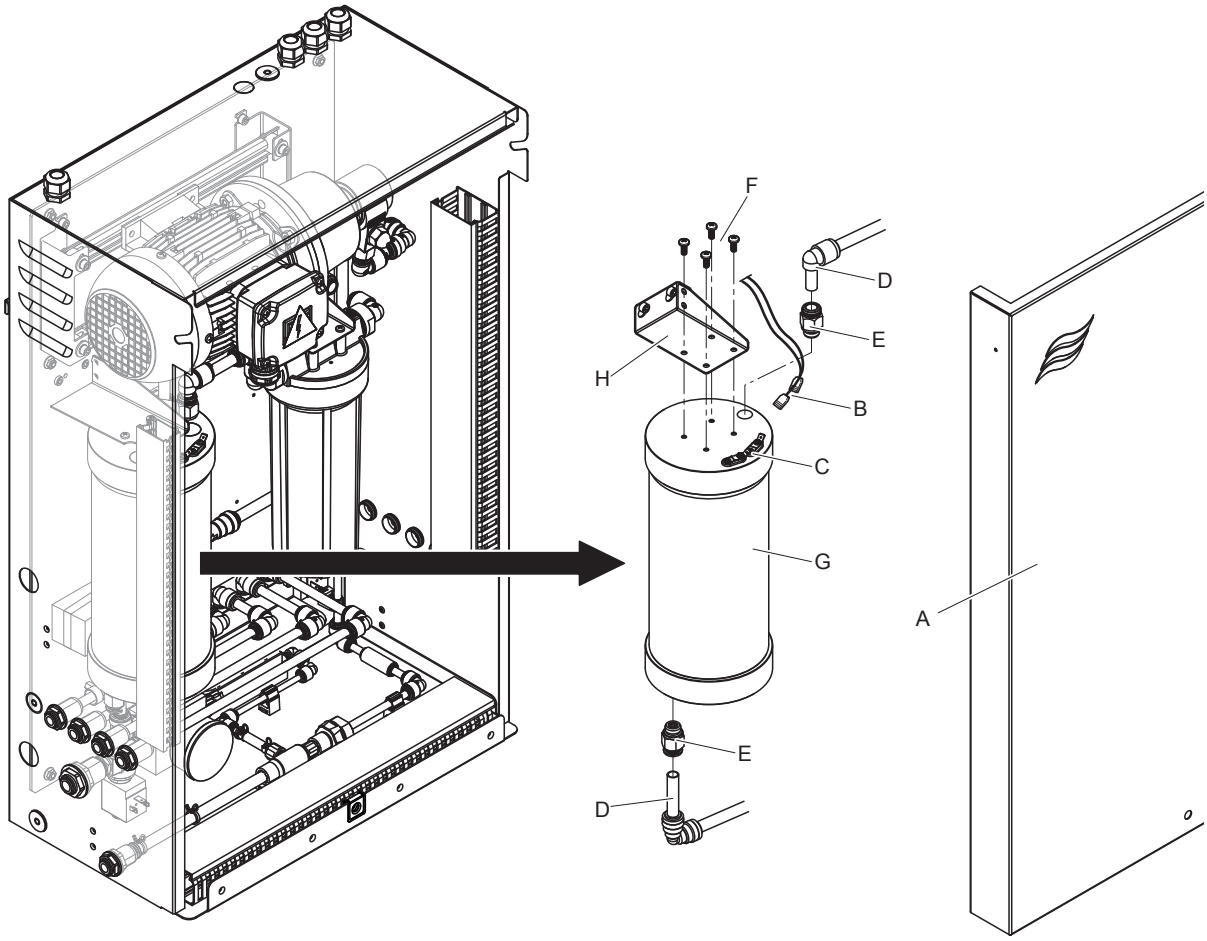

Fig. 13: Replacing the silver cartridge

1. Set the humidification system Condair DL **out of operation** as described in *Section 4.5* and **release the pressure in the water system**.
2. Unlock the front cover "A" of the central unit and remove the front cover.
3. Remove the two electrical connectors "B" from the connections "C" on the silver cartridge.

4. **CAUTION!**

   The silver cartridge is filled with water. Place an absorbent rag under the cartridge before loosening the connections and wipe away any splashed water afterwards.

   Loosen the hose connectors "D" at the entry and the exit, then remove both screw-in nipples "E".

5. **CAUTION!**

   The silver cartridge weighs approx. 3 kg.

   Undo the four screws "F" fastening the silver cartridge "G" to the holder "H", then remove the cartridge.

6. Install the new silver cartridge in the reverse order.
7. Attach the front cover of the central unit "A" and lock it with the screw.

Important: Exhausted silver cartridges **must be sent to the local Condair representative for correct disposal**.

6.6 Replacement of the optional sterile filter and de-aeration of the filter housing

Replacing the sterile filter

If error "E66" is shown or before each new humidification season the sterile filter must be replaced.
Important: The sterile filter must be replaced immediately if the water supply has been contaminated due to a malfunction.

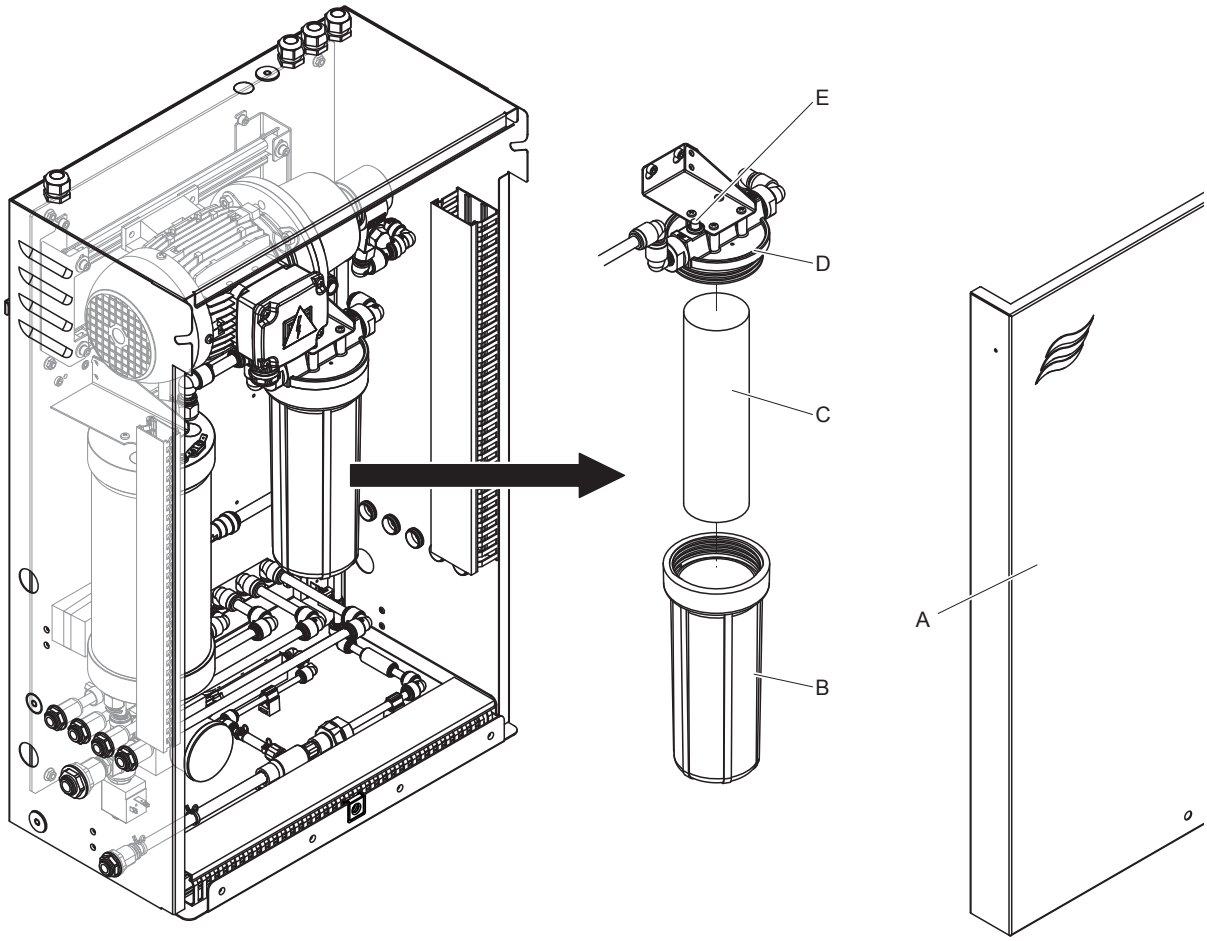

Fig. 14: Replacing the sterile filter

1. Set the humidification system Condair DL **out of operation** as described in *Section 4.5* and **release the pressure in the water system**.
2. Unlock the front cover "A" of the central unit and remove the front cover.
3. Loosen and remove the filter housing "B". Then, remove filter cartridge "C".
4. Clean filter housing "B" and upper part of filter "D".
5. Insert new filter cartridge "C" into the filter housing "B".
   Important! Use original filter cartridge from your Condair representative only.
6. Screw in filter housing "B" with new filter cartridge into upper part of filter "D" and tighten it.

7. Vent the sterile filter:
   After replacement of the sterile filter cartridge or when the filter housing has been opened the sterile filter must be vented. Proceed as follow:

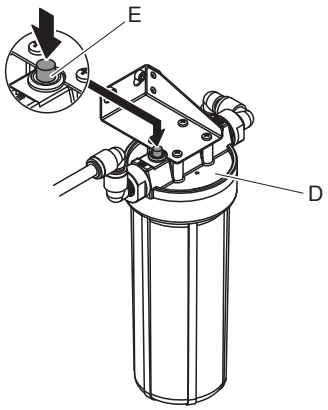

Fig. 15: Venting the sterile filter

   - Set the humidification system Condair DL into operation as described in *Section 4.3*.
     Important: a minimum flow pressure of 3.0 bar must present in the water supply line.
   - Perform a manual flushing cycle (see *Section 4.4.4*). As soon as an acoustic noise is audible from the water flow press the red venting knob "E" on top of the filter housing cover "D" (see *Fig. 15*) until water (without air) is pouring out.
     Note: If an error message is active the malfunction must be eliminated before a the flushing can be performed.
   - Check the filter housing for leaks.
   - If necessary, stop manual flushing cycle.
8. Attach the front cover of the central unit "A" and lock it with the screw.

6.7 Resetting the Ag-ion maintenance counter

After replacement of the silver cartridge, the corresponding maintenance indication or maintenance counter, respectively must be reset. Proceed as follows:

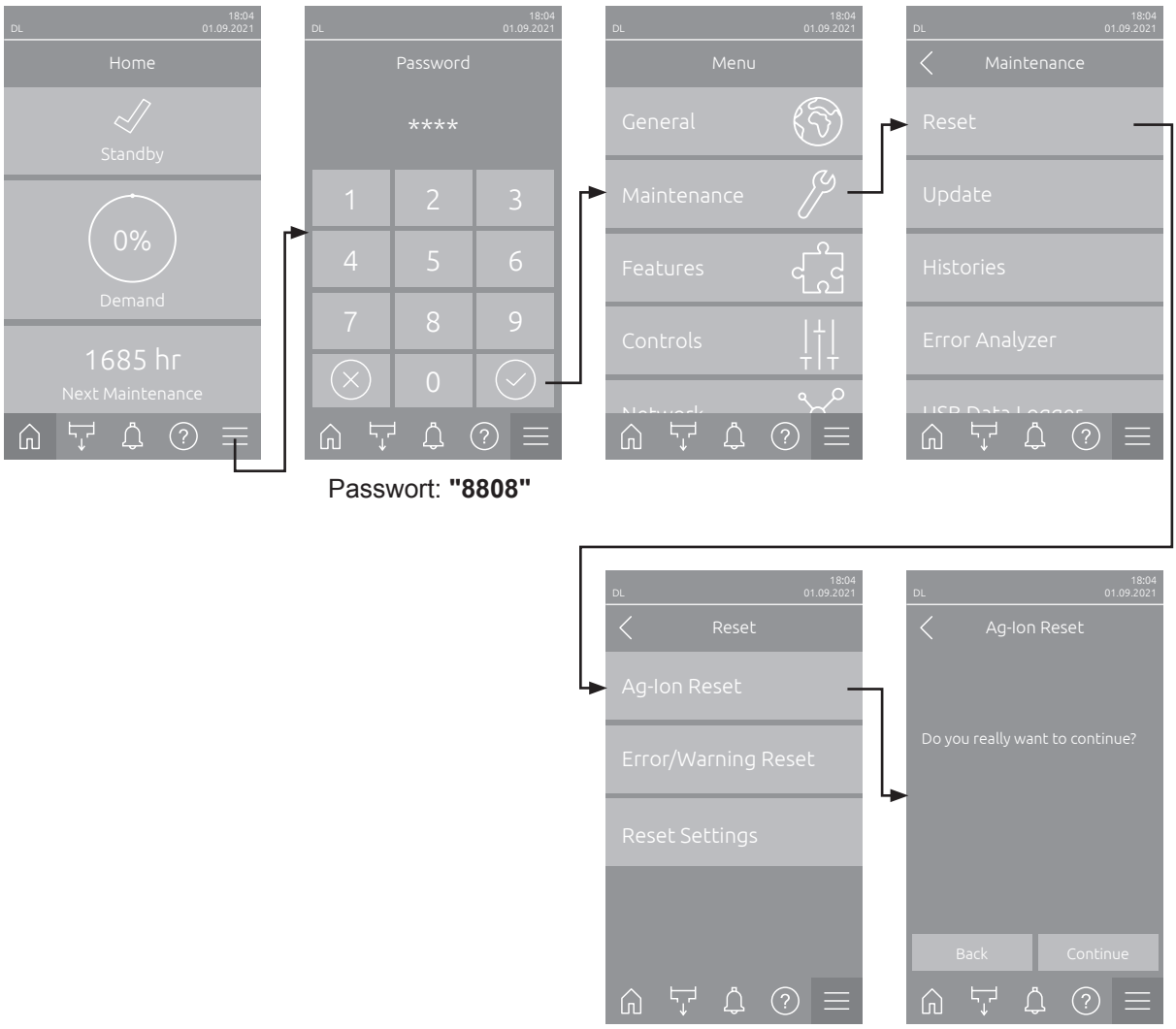

1. Select in the "Reset" submenu (Path: "Menu > Password: 8808 > Maintenance > Reset"). Then select the "Ag-Ion Reset" reset function.
2. The reset confirmation dialog appears:
   - Press the **<Continue>** button to reset the Ag-Ion maintenance counter. The corresponding maintenance counter and the maintenance indication are reset.
   - Press the **<Back>** button if the silver cartridge has not yet been replaced and you want to abort the reset procedure. The control unit returns to the "Reset" submenu.

6.7.1 Resetting the maintenance counter for the system maintenance

After system maintenance has been performed, the corresponding maintenance indicator or maintenance counter must be reset.

The "Maintenance Reset" function only appears after accessing the menu with the service password. Contact your Condair representative.

6.8 Performing a software update

To update the control software of the Condair DL or the firmware of one of its electronic boards, proceed as follows:

1. Set the **<On/Off>** switch on the right side of the control unit to the Off position, then switch off the voltage supply to the control unit via the external electrical isolator and secure switch in the Off position to prevent it from inadvertent power up.
2. Unlock the front cover of the control unit and remove it.
3. Open control unit inner swing door.
4. Carefully insert FAT32 formatted USB stick containing the corresponding control software update into the USB port on the Integrated Controller. Make sure that the maximum length of the USB stick does exceed 75 mm (3").
   Note: In order to perform the control software update, a valid update file must be located at the top level outside of a folder on the USB stick. Otherwise, an appropriate error message appears when starting the software update.
5. Close control unit inner swing door, then relocate the front cover of the control unit and lock it with the screw.
6. Remove the lock and tag from the external electrical isolator. Then, switch on external electrical isolator to restore power to the control unit.
7. Set the **<On/Off>** switch on the right side of the control unit to the On position.
8. When the home screen appears, select the **<Menu>** button, then enter the password (8808) to login.
9. Select the function "Update" (Path: "Menu > Password. 8808 > Maintenance > Update". See also *Section 5.3.2.3*.
10. The software update confirmation screen appears. Press the <Continue> button.
11. An information window appears after a few minutes with information on the software update. Press the <Reboot> button to start the software update.

    The update starts. During the update, the display is inactive and the LED is flashing blue. If the update has completed the control unit returns to the home screen.

    CAUTION!

    Do not interrupt a software update once it has started. Wait until updating is completed. A corrupted control software can render the control unit unusable.
    Note: If software update is accidentally interrupted, the control unit will not operate, but the software update can be resumed by leaving the USB key inserted in the Integrated Controller and power cycling the control unit. The integrated controller will detect the control software was not properly installed and restart the update.
12. Repeat steps 1 to 3, then carefully remove the USB stick.
13. Close control unit inner swing door, then relocate the front cover of the control unit and lock it with the screw.
14. Repeat Step 6 and 7 to power up the control unit.

7 Fault elimination

7.1 Important notes on fault elimination

Qualification of personnel

Repair work must be carried out only by **qualified and well-trained professionals authorized by the owner**.

Repair work relating to the electrical installation must be carried out by an electrician or professionals authorized by the owner.

General notes

Repair work on the frequency converter and the booster pump must be carried only by your Condair representative.

Only use original spare parts from your Condair representative to replace defective parts.

Safety

DANGER!
Risk of electric shock!

The control unit of the Condair DL and the pump motor inside the central unit (if applicable) are mains powered. Live parts may be exposed when the control unit and/or the central unit is/are open. Touching live parts may cause severe injury or danger to life.

Prevention: Before carrying out any work on the components of the Condair DL take the system out of operation as described in *Section 4.5* and secure the system against inadvertent power-up.

Important: **The frequency converter in the control unit of systems with booster pump contains capacitors. These can remain charged with a potentially deadly voltage for a certain period of time after the control unit has been disconnected from the power supply. Therefore, wait at least 10 minutes after disconnecting the power supply. Then make sure the appropriate contacts on the frequency converter and the terminals on the pump motor are free of voltage before starting any work on these components!**

CAUTION!

The electronic components inside the control unit are very sensitive to electrostatic discharge.

Prevention: Before carrying out any repair work to the electrical or electronic equipment of the control unit, appropriate measures must be taken to protect the respective components against damage caused by electrostatic discharge (ESD protection).

7.2 Fault indication

Malfunctions during operation detected by the control software are indicated by a corresponding **Warning** message (Status LED lights up yellow and the exclamation mark symbol is displayed in the device and error status field of the home screen) or **Error** message (Status LED lights up red and the cross symbol is displayed in the device and error status field of the home screen).

Warning

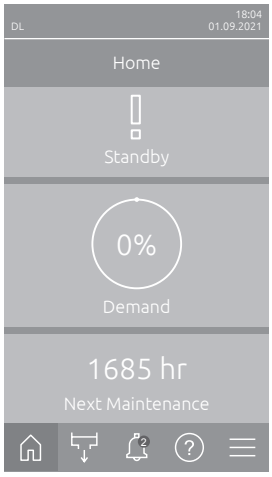

Temporary problems (e.g., water supply interrupted for a short time) or malfunctions which cannot cause damage to the system are indicated with a warning message, additionally the status LED lights up yellow. **If the cause of the malfunction disappears of its own accord within a certain period of time, the warning message will automatically switch off otherwise an error message is triggered.**
Note: Warnings can be indicated also via the service relay of the remote operating and fault indication. Therefore the warning indication via the service relay must be activated in the "Network" submenu of the control software (see *Section 5.3.5.6*).

Error

Malfunctions where further operation is not possible any longer or malfunctions which can damage the system are indicated with an error message, additionally the status LED lights up red. If such a malfunction occurs the operation of the system is limited only, or the system will be stopped automatically.

By pressing on the <Malfunction> button in the home screen the error list shown with all active warning and error messages. By pressing on the corresponding Warning or Error entry additional information regarding the malfunction are displayed (see display on the far right).

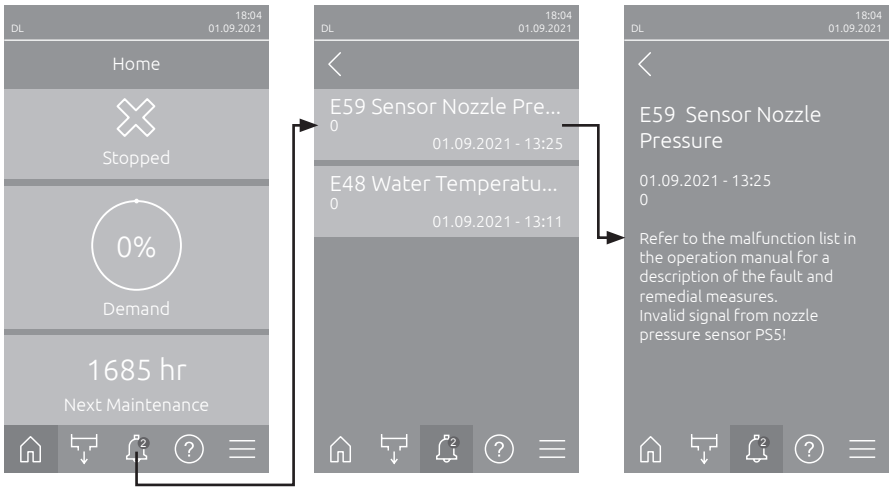

7.3 Malfunction list

Most operational malfunctions are not caused by faulty equipment but rather by improper installation or disregard of planning guidelines. Therefore, a complete malfunction diagnosis always involves a thorough examination of the entire system (e.g., hose connections, humidity control system, etc.).

Note: Remedial measures highlighted in gray in the malfunction list may only be remedied by a Condair service technician or a service center authorized by Condair. If applicable, contact your Condair representative.

Code		Message	Information	
Warning	**Error**		**Possible causes**	**Remedy**
W01	**—**	**Smartcard**	No communication with Smartcard.	
			No Smartcard installed.	Contact your Condair representative.
			Smartcard not valid or defective.	
—	**E10**	**Controller Reset**	The control unit (Integrated Controller) has been automatically restarted due to a software problem.	
			The control unit (Integrated Controller) has been automatically restarted due to a software problem	Contact your Condair representative if this problem regularly occurs.
—	**E14**	**Pressure Relief Failed**	The central unit's hydraulic system could not be drained.	
			Drain valve Y10 does not open or opens incompletely.	Contact your Condair representative.
			Inlet valve Y1 does not close.	
			Drain line blocked or kinked.	Check the drain line. Repair any blockages or kinks in the drain line.
			Too much back pressure in the drain line.	Eliminate the cause of the excessive back pressure (route the drain line into an open drain funnel).

Code		Message	Information	
Warning	Error		Possible causes	Remedy
—	E19	**Freeze Protection**	Temperature of the supply water is near the freezing point. Temperature flushing has triggered. Note: The temperature flushing shall prevent the freezing of the hydraulic system by the movement of the water. Humidification is still possible.	
			Temperature of the supply water too low.	Check water system. Insulate water pipes.
			Ambient temperature in the area of the central unit too low.	Place the central unit differently or protect it from the cold.
W20	E20	**Safety Loop**	External safety loop is open, humidification is stopped! Note: as soon as the safety loop is closed again the humidification system Condair DL continues to work normally.	
			Ventilation interlock open.	Check/switch on fan of the AHU.
			Air flow monitor has triggered.	Check fan/filter of the AHU.
			High limit humidistat has triggered.	Wait, check/replace high limit humidistat.
			Fuse "F2" on the driver board defective.	Contact your Condair representative.
W22	E22	**Water Missing!**	Inlet water pressure too low or not present! Note: as soon as the water pressure rises again above the set minimum value the humidification system Condair DL to work normally.	
			Shut-off valve in the water supply line closed.	Open shut-off valve.
			Reverse osmosis system is regenerating or switched off.	Wait or switch on reverse osmosis system.
			Inlet valve Y1 defective or clogged.	Contact your Condair representative.
			Pressure sensor PS4 defective.	
W28	E28	**Maintenance**	The maintenance interval of the system maintenance has elapsed. If the system maintenance is not performed and the maintenance message is not reset within one week after the maintenance message has been triggered an error message is triggered!	
			System maintenance due.	Contact your Condair representative.
—	E32	**Demand Sensor**	Demand signal invalid, humidification is stopped!	
			Humidity sensor or external controller not or not correctly connected.	Contact your Condair representative.
			Sensor/controller wrong configured.	Correctly configure sensor/controller via the configuration menu (see *Section 5.3.4*).
			Sensor/controller defective.	Contact your Condair representative.
W35	—	**Signal Timeout**	The network (Modbus, BACnet, LonWorks) has stopped sending humidity/demand updates.	
			Signal cable from network not connected correctly or defective.	Contact your Condair representative.
			Interfering signal present.	
			Address conflict with other units in the network.	Correctly set unit adresses.
W44	E44	**Water Temperature**	Supply water temperature has exceeded the limit value. Humidification is still possible for the moment	
			Temperature of the supply water too high.	Check water system.
			Ambient temperature in the area of the central unit too high.	Ventilate/cool the room.
			Water temperature sensor defective.	Contact your Condair representative.
			Water temperature sensor not or not correctly connected.	
—	E48	**Water Temperature Sensor**	Water temperature sensor signal invalid.	
			Water temperature monitoring activated but water temperature sensor not or not correctly connected.	Contact your Condair representative.
			Water temperature sensor defective.	Contact your Condair representative.

Code		Message	Information	
Warning	Error		Possible causes	Remedy
W50	—	Out of Commissioning	This message appears on commissioning if the system or the control unit, respectively was disconnected from the mains for more than 48 hours. The system remains blocked for 5 minutes, and then starts automatically with a flushing cycle.	
			The control unit was disconnected from the mains for more than 48 hours.	We recommend disconnecting the water supply line from the reverse osmosis system on the connection of the central unit and to flush the supply line for 5 minutes into a separate drain. Then, reconnect the water supply line.
W51	—	Level Disinfection Tank	Level of the disinfectant in the tank is too low. Humidification is further possible for limited period of time!	
			Disinfectant in the tank is used up.	Refill disinfectant.
			Level sensor is not or not correctly connected.	Contact your Condair representative.
			Level sensor defective.	
—	E54	Leak Monitoring	Leak of water detected, humidification is stopped!	
			Water supply line and/or spray circuit lines to the AHU and/or water drain line leaky.	Check/seal water supply line, spray circuit lines and water drain line.
			Components (tubes, valves, sliver cartridge, etc.) in the central unit leaky.	Contact your Condair representative.
			Fuse "F2" on the driver board defective.	
W55	E55	Ag-Ion Service	Sliver cartridge is exhausted and must be replaced, humidification is further possible for limited period of time!	
			Sliver cartridge not replaced, or silver cartridge maintenance counter not reset after sliver cartridge has been replaced.	Replace sliver cartridge (see Section 6.5) and reset silver cartridge maintenance counter (see Section 6.7).
—	E59	Sensor Nozzle Pressure	Invalid signal from nozzle pressure sensor PS5!	
			Pressure sensor PS5 not or not correctly connected.	Contact your Condair representative.
			Pressure sensor PS5 wrong configured.	
			Pressure sensor PS5 defective.	
—	E62	Nozzle Pressure	Nozzle pressure too high!	
			Wrong type of nozzle installed.	Contact your Condair representative.
			Nozzles clogged.	Clean or replace nozzles (see Section 6.4.2).
			Max. nozzle pressure set too high.	Contact your Condair representative.
			Wrong order of spray circuits or spray valves.	
			Pressure relief valve on booster pump set too high.	
—	E63	Ag-Ion Broken	It is not possible to generate a sufficient current on the sliver cartridge!	
			Sliver cartridge exhausted or defective.	Replace sliver cartridge (see Section 6.5) and reset silver cartridge maintenance counter (see Section 6.7).
			Electrical supply to sliver cartridge interrupted.	Contact your Condair representative.
			Installed sliver cartridge too small.	
			Ag board defective.	
—	E64	Ag-Ion Short Circuit	Short circuit on sliver cartridge!	
			Sliver cartridge has internal short circuit due to material defect or due to exhaustion.	Replace sliver cartridge (see Section 6.5) and reset silver cartridge maintenance counter (see Section 6.7).

Code		Message	Information	
Warning	Error		Possible causes	Remedy
—	E65	Ag-Ion Test	Daily silver ionization test failed.	
			The sliver cartridge cannot build up the required current because the end of lifespan of the cartridge is reached or a wrong cartridge type is installed.	Replace sliver cartridge (see Section 6.5) and reset silver cartridge maintenance counter (see Section 6.7).
—	E66	Sterile Filter	Pressure after sterile filter too low.	
			Filter clogged.	Disinfect RO water supply line and replace sterile filter (see Section 6.6).
			Water replenishment of the RO water supply line too low.	Encrease diameter of the RO water supply line.
			Pressure switch PS2 after sterile filter defective.	Contact your Condair representative.
			Pressure sensor PS5 defective.	
W67	E67	No Air Pressure	Air pressure of the air cleaning option too low or no pressure present.	
			Pressure regulator wrongly adjusted.	Correctly adjust pressure regulator (2...6 bar).
			Shut-off valve in the compressed-air supply line closed.	Open shut-off valve in the compressed-air supply line.
			Air cleaning valve Y3 clogged or defective.	Contact your Condair representative.
—	E70	Water Conductivity Sensor	Invalid signal from conductivity sensor!	
			Conductivity sensor disconnected or connecting cable interrupted.	Contact your Condair representative.
			Conductivity monitoring wrong configured.	
			Conductivity board defective	
W71	E71	Limite Permeate	Conductivity of the supply water from the reverse osmosis system has exceeded the upper limit value! Humidification still possible at the moment.	
			Reverse osmosis system defective or wrong configured or maintenance due.	Let have the reverse osmosis system be checked/repaired.
			Conductivity sensor not correctly set.	Contact your Condair representative.
—	E72	Conductivity Permeate	Conductivity of the supply water from the reverse osmosis system has exceeded the max. limit value! Humidification is stopped!	
			Reverse osmosis system wrong configured.	Let have the reverse osmosis system be setup correctly.
			Permeate membrane of the reverse osmosis system defective or maintenance due.	Let have the reverse osmosis system be checked/maintained/repaired.
			Conductivity board wrong configured or defective.	Contact your Condair representative.
			Conductivity sensor soiled or defective (short circuit).	
—	E74	Keep Alive	Communication between Integrated Controller (control board) and driver board interrupted.	
			Driver board not connected.	Contact your Condair representative.
			Wrong driver board installed.	
			Driver board defective.	
	E80	USB Data Logger	USB data logger fault.	
			USB data logger not connected or defective.	Check/replace USB data logger.
W81	E81	Disinfection	Day counter for the disinfection has expired.	
			Disinfection due.	Contact your Condair representative.
W82	E82	Driver Missing	Communication with driver board interrupted.	
			RS485 Bus to driver board interrupted.	Contact your Condair representative.
—	E84	Driver Defective	Unknown fault on driver board.	
			Driver board defective.	Contact your Condair representative.

Code		Message	Information	
Warning	Error		Possible causes	Remedy
—	E85	**Driver ID Wrong**	Driver board ID wrong.	
			Wrong driver board connected or SAB address wrong.	Contact your Condair representative.
—	E86	**Driver Incompatible**	Wrong version of driver board.	
			Wrong version of driver board.	Contact your Condair representative.
—	E87	**Local 24V Supply**	Local 24V supply out of valid range!	
			Short circuit on supply module or supply module defective.	Contact your Condair representative.
—	E88	**Local 5V Supply**	Local 5V supply out of valid range!	
			Short circuit on supply module or supply module defective.	Contact your Condair representative.
—	E89	**Local Reference Supply**	Local reference voltage out of valid range!	
			DC supply faulty or supply line interrupted.	Contact your Condair representative.
—	E91	**Pressure Instable**	Water inlet pressure unstable!	
			Shut-off valve in the water supply line not fully open.	Check/completely open shut-off valve.
			Pressure of the reverse osmosis system too low.	Let have the reverse osmosis system be checked/maintained/repaired.
			Cross section of the supply line too small.	Install water supply line with lager cross section (min. ø10/12 mm).
			Sterile filter clogged.	Clean sterile filter housing and replace filter cartridge (see *Section 6.6*).
—	E93	**FC Error**	Monitoring of the frequency converter has triggered.	
			Frequency converter overloaded, too hot, or over current monitoring has triggered. Error code can be checked on frequency converter.	Contact your Condair representative.
			Fuse "F1" on the driver board defective.	
			Pressure relief valve on booster pump set too high.	
—	E94	**FC Current**	Current of the frequency converter is too high!	
			Booster pump or pump motor blocked.	Contact your Condair representative.
			Frequency converter or control wrong configured.	
			Spray circuit valves clogged or defective.	
			Nozzles or spray circuit lines clogged.	Clean or replace nozzles (see *Section 6.4.2*). Check/clean/replace spray circuit lines.
			Pressure relief valve on booster pump set too high.	Contact your Condair representative.
—	E96	**Peripheral 5V Supply**	Peripheral 5 V supply out of valid range.	
			5V supply interrupted.	Contact your Condair representative.
			Fuse "F2" on the driver board defective.	
			Overload on external connection.	
			Overload due to defective pressure sensor.	
—	E97	**External 24V Supply**	External 24 V supply out of valid range.	
			Fuse "F2" on the driver board defective.	Contact your Condair representative.
			Short circuit on external connection.	
			Overload on external connection.	

Code		Message	Information	
Warning	Error		Possible causes	Remedy
—	E98	External 10V Supply	External 10 V supply out of valid range.	
			Fuse "F2" on the driver board defective.	Contact your Condair representative.
			Short circuit on external connection.	
			Overload on external connection.	
—	E100	Y1	Fault on inlet valve Y1.	
			Inlet valve not connected or coil defective.	Contact your Condair representative.
—	E103 to E107	Yx (e.g., Y5)	Fault on corresponding spray valve (Y5 to Y9).	
			Spray valve not connected or coil defective.	Contact your Condair representative.
—	E110	Y10	Fault on drain valve Y10.	
			Drain valve not connected or coil defective	Contact your Condair representative.
—	E111	Y4	Fault on external optional water supply flushing valve Y4.	
			Water supply flushing valve not connected or coil defective	Contact your Condair representative.
—	E113	Y3	Fault on optional air cleaing valve Y3.	
			Air cleaing valve not connected or coil defective	Contact your Condair representative.
—	E118	Water Temperature	Supply water temperature has exceeded the max. limit value. Humidification is stopped.	
			Ambient temperature in the area of the central unit too high.	Ventilate/cool the room.
			Supply water temperature too high.	Check water system.
			Water temperature sensor defective.	Contact your Condair representative.
			Water temperature sensor not or not correctly connected.	
—	E147	Unaccepted parameter	The control unit is running with the default configuration, which is incorrect for this humidifier. The configuration must be adjusted to the specific system. Please contact Product Support.	
			The device was not configured correctly.	Contact your Condair representative.
—	E153	Y11	Fault on optional auxiliary outlet valve Y11.	
			Auxiliary outlet valve not connected or coil defective.	Contact your Condair representative.
W157	—	Software download from USB failed	Software download from USB failed.	
			Connection aborted during software download from USB stick or faulty update file.	Contact your Condair representative.
W158	—	Software download from Cloud failed	Software download from Cloud failed.	
			Connection aborted during software download from Cloud or faulty update file.	Contact your Condair representative.
—	E162	Software update failed	Software update failed.	
			Integrated controller switched off during update process or invalid software version downloaded.	Contact your Condair representative.
W165	—	USB Data Logger Definition missing	USB data logger definition file not found on device.	
			The definition file for the USB data logger is missing.	Contact your Condair representative.
W166	—	Error Analyzer Definition missing	Error analyzer definition file not found on device.	
			The definition file for the error analyzer is missing.	Contact your Condair representative.

7.4 Malfunctions without indication

The following table presents malfunctions that do not trigger an error message, together with indications on their cause and notes on how to eliminate the sources of trouble

Failure	Cause	Remedy
Residual water in the section of the AHU outside the drain pan.	Sealing elements improperly installed or defective	Mount sealing elements correctly or replace, as required (see Condair DL installation manual).
	Ceramic plates improperly installed or ceramic plates broken.	Correctly install or replace ceramic plates (see Condair DL installation manual).
	Air velocity in the AHU is too high (systems without droplet separator >2.5 m/s, systems with droplet separator >4 m/s).	Reduce air velocity in the AHU, if possible, or install droplet separator (consult your Condair representative).
Condair DL humidifies permanently.	Nominal value of humidity is set too high.	Set humidity setpoint value correctly (siehe *Section 5.3.4.2*).
	Ambient humidity very low.	Wait.
	The internal controller is activated although an external controller is connected.	Deactivate the internal controller (siehe *Section 5.3.4.2*).
Spray valves open and close continually.	Unstable control signal.	Check controller settings and adjust controller, as required (siehe *Section 5.3.4.2*).
Maximum humidification capacity is not reached	Capacity limitation active.	Deactivate capacity limitation (set to: 100%). See *Section 5.3.3.2*.
	Nozzles clogged.	Clean or replace nozzles (see *Section 6.4.2*).
	Softstart function in progress.	Wait until set time has elapsed and the softstart function is terminated.
	System incorrectly dimensioned (insufficient capacity).	Contact your Condair representative.
	Booster pump defective (insufficient permeate pressure)	
	Pressure relief valve of booster pump not adjusted correctly.	
Booster pump starts too late or not at all	Capacity limitation activated.	Deactivate capacity limitation (set to: 100%). See *Section 5.3.3.2*.
	Booster pump not activated.	Contact your Condair representative.
	Softstart function in progress.	Wait until set time has elapsed and the softstart function is terminated.
Spray valve Y5 (spray circuit 1) and/or spray valve Y6 (spray circuit 2) and/or spray valve Y7 (spray circuit 3) do not open	Spray valve Y5 and/or spray valve Y6 and/or spray valve Y7 defective.	Contact your Condair representative.
	Capacity limitation active.	Deactivate capacity limitation (set to: 100%). See *Section 5.3.3.2*.
Spray valve Y8 (spray circuit 4) and/or Y9 (spray circuit 5) do not open even with 100% humidity demand.	Spray valve Y8 and/or spray valve Y9 defective or not activated in the control system.	Contact your Condair representative.
	Wrong stage control (7-steps instead of 15-steps)	
The humidifier is automatically powered down after about one week of operation.	Silver ionization defective or exhausted. Capacity counter run-out.	Replace silver cartridge (see *Section 6.5*) and reset the capacity counter (see *Section 6.7*).

7.5 Saving fault and service histories to a USB stick

The fault and service histories of the Condair DL can be saved to a USB stick for logging and further analysis. For this purpose, proceed as follows:

1. Set the **<On/Off>** switch on the right side of the control unit to the Off position, then switch off the voltage supply to the control unit via the external electrical isolator and secure switch in the Off position to prevent it from inadvertent power up.
2. Unlock the front cover of the control unit and remove it.
3. Open control unit inner swing door.
4. Carefully insert FAT32 formatted USB stick into the USB port on the Integrated Controller. Make sure that the maximum length of the USB stick does exceed 75 mm (3").
5. Close control unit inner swing door, then relocate the front cover of the control unit and lock it with the screw.
6. Remove the lock and tag from the external electrical isolator. Then, switch on external electrical isolator switch to restore power to the control unit.
7. Set the **<On/Off>** switch on the right side of the control unit to the On position.
8. When the home screen appears:
   - Select "**Menu > Password**: **8808 > Maintenance > Histories > Export Error/Warning History**". The last 80 events are then downloaded to the USB stick as separate .csv file (Automatically generated file name: "ExceptionHistory_<DeviceType>_<Serial#>_<Date>_<Time>.csv").
   - Select "**Menu > Password**: **8808 > Maintenance > Histories > Export Maintenance History**". The last 20 events are then downloaded to the USB stick as separate .csv file (Automatically generated file name: "ServiceHistory_<DeviceType>_<Serial#>_<Date>_<Time>.csv").
9. Repeat steps 1 to 3, then carefully remove the USB stick.
10. Close control unit inner swing door, then relocate the front cover of the control unit and lock it with the screw.
11. Repeat Step 6 and 7 to power up the control unit.

7.6 Resetting malfunction indication

To reset the malfunction indication, proceed as follows:

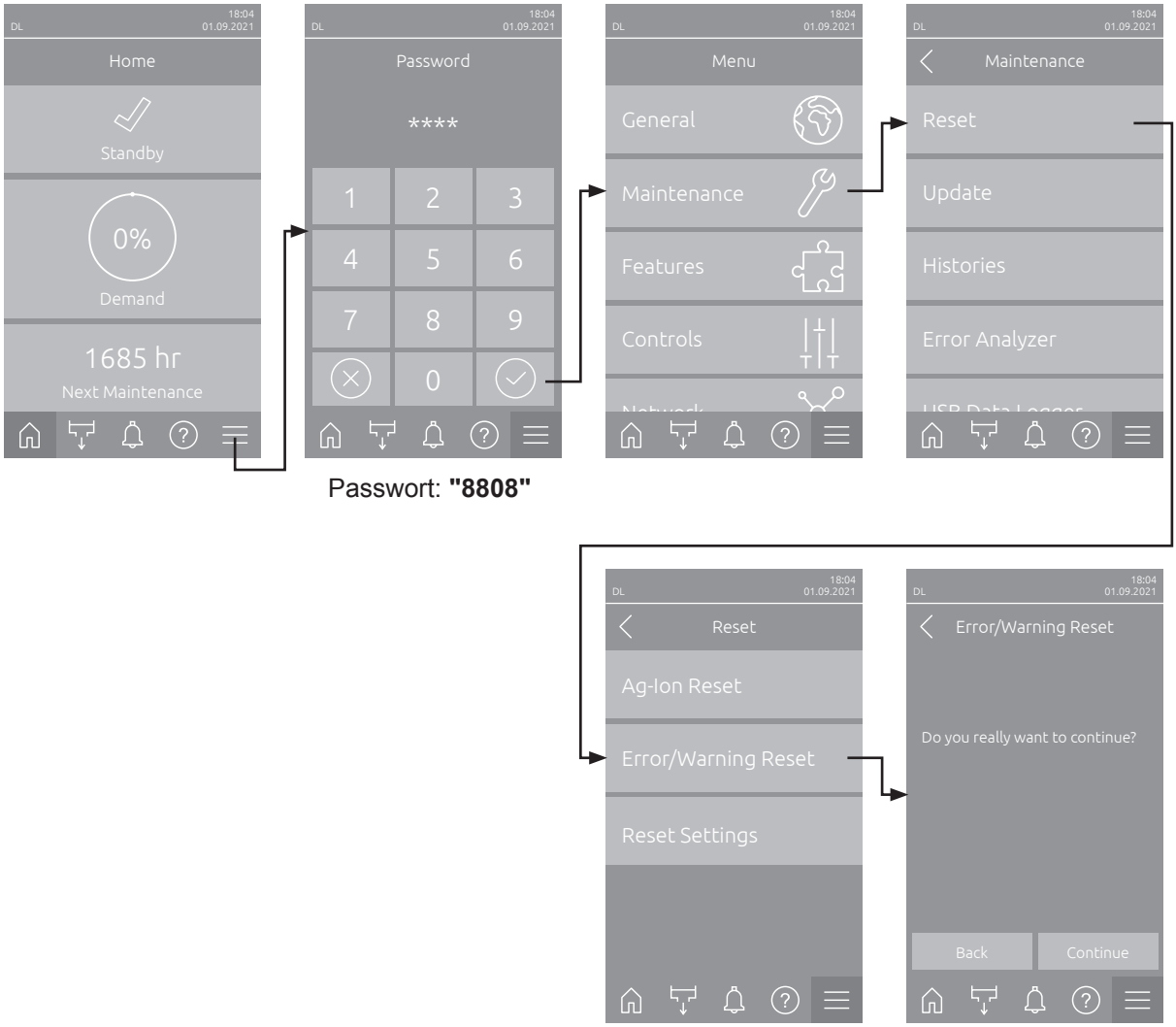

1. Select in the "Error/Warning Reset" function (Path: "Menu > Password: 8808 > Maintenance > Reset > Error/Warning Reset").
2. The reset confirmation dialog appears:
   - Press the **<Continue>** button to reset the malfunction indication(s).
   - Press the **<Back>** button to abort the reset procedure. The control unit returns to the "Reset" submenu.

If the malfunction indication cannot be reset via the control software (e.g., the display hangs), proceed as follows to reset the malfunction indication(s):

1. Switch off the control unit via the **<On/Off>** switch (on the right side of the control unit) or the electrical isolator.
2. Wait 10 seconds, then switch the control unit back on via the **<On/Off>** switch or the electrical isolator.

Note: If the cause of the malfuntion(s) has/have not been eliminated, the malfunction indication(s) reappear(s) after a short while.

7.7 Replacing the fuses and backup battery in the control unit

The fuses of the control unit must be replaced by **authorized personnel only** (e.g. electrician).

Replace fuses of the control unit only with fuses matching the specifications below with the appropriate nominal current capacity.

Never use refurbished fuses. Do not bridge the fuse holder.

To replace the fuses or the backup battery, proceed as follows:

1. Disconnect control unit from the mains by switching off the electrical isolator and secure electrical isolator in "Off" position against inadvertent switching on.
2. Undo the screw of the front cover of the control unit, then remove the front cover.
3. Open control unit inner swing door.
4. Replace desired fuse or the backup battery.

DANGER!

It is mandatory that the contact protection for fuse "F1" be reinstalled after the fuse has been replaced.

5. Close control unit inner swing door, then relocate the front cover of the control unit and lock it with the screw.
6. Reconnect control to the mains by switching on the electrical isolator.

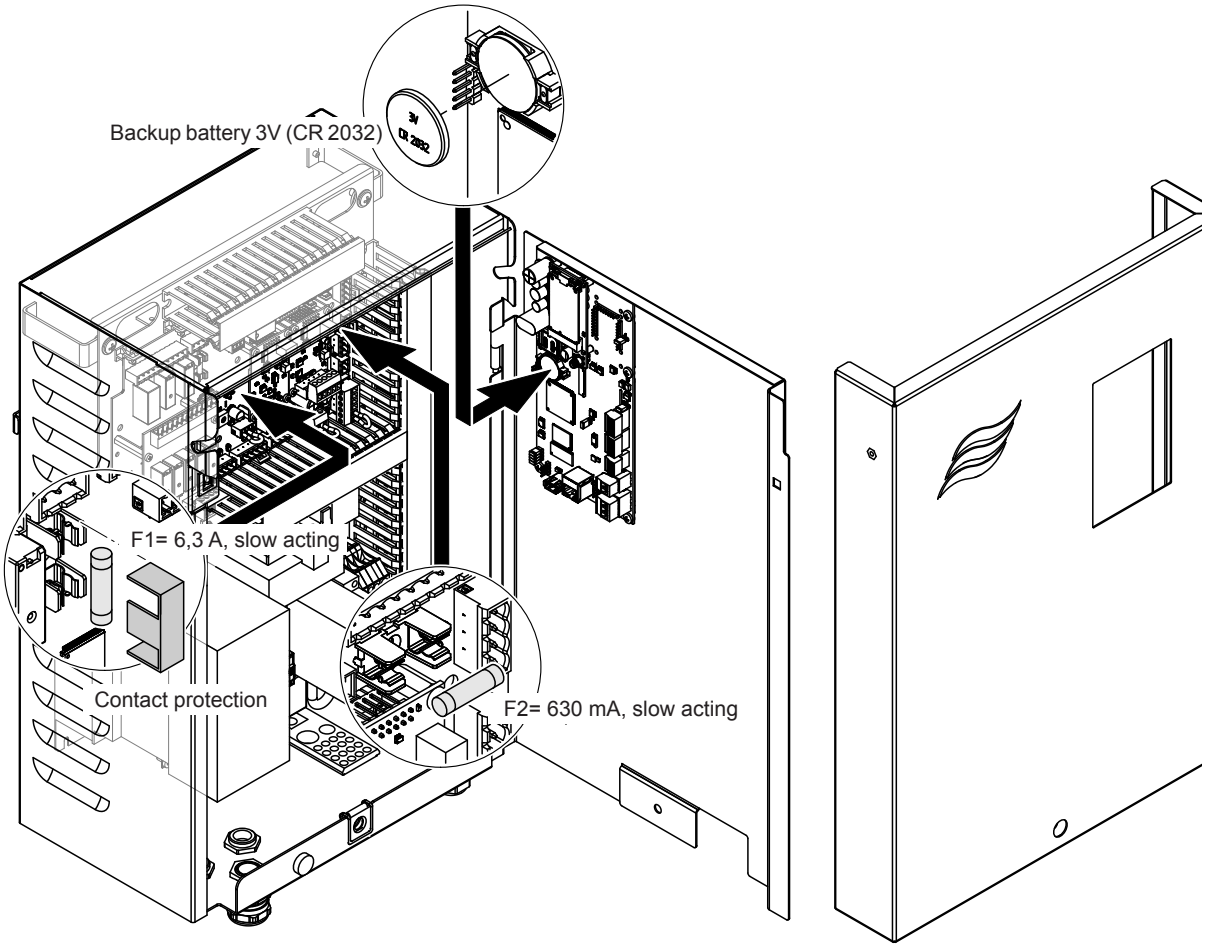

Fig. 16: Fuse and battery replacement

8 Taking out of service/Disposal

8.1 Taking out of service

If the humidification system Condair DL must be replaced or if the humidification system is not needed any more, proceed as follows:

1. Take the humidification system Condair DL out of operation as described in *Section 4.5*.
2. Have the system components unmounted by a qualified service technician.

8.2 Disposal/Recycling

Components not used any more must not be disposed of in the domestic waste. Please dispose of the individual components in accordance with local regulations at the authorized collecting point.

If you have any questions, please contact the responsible authority or your local Condair representative.

Thank you for your contribution to environmental protection.

9 Product specification

9.1 Technical data

	Condair DL	
	Type A (**with** booster pump)	Type B (**without** booster pump)
Dimensions/Weight		
Installation length in AHU (Min - Max)	600 - 900 mm [1]	
Width AHU (Min - Max)	450 - 8400 mm [2]	
Height AHU (Min - Max)	450 - 4000 mm [2]	
Dimensions central unit HxWxD	800 x 530 x 285 mm	
Weight central unit	approx. 54 kg	approx. 35 kg
Dimensions control unit HxWxD	485 x 345 x 217 mm	
Weight control unit	approx. 15 kg	
Wet weight post-evaporation unit	approx. 55 kg/m^2 humidifier area	
Dry weight post-evaporation unit	approx. 40 kg/m^2 humidifier area	
Hydraulic		
Humidification capacity	5 ... 1000 kg/hr [3]	5 ... 1000 kg/hr [3]
Nozzle pressure	3 ... 7 bar	
Nozzle sizes	8 (1.5, 2.0, 2.5, 3.0, 3.5, 4.0, 4.5 and 5.0 kg/hr at 4 bar)	
Spray circuit valves	3/2 way NO (normally open)	
Flushing water consumption	<210 kg/hr nozzle capacity: 2.2 - 2.5 l/min at 4 bar >210 kg/hr nozzle capacity: 3.7 - 4.0 l/min at 4 bar	
Electric		
Supply voltage/current control unit	200 ... 240 VAC / 50..60 Hz, max. 6 A	115 ... 240 VAC / 50..60 Hz, max. 6 A
Control booster pump motor	continuous with frequency converter	——
Power consumption control unit (including solonoid valves)	55 ... 65 VA (dependent on the number of switched valves and whether the display is in sleep mode or not)	
Motor rating booster pump	approx. 12 VA per 10 kg/hr spray capacity [6]	——
Voltage solenoid valves (Y1-Y10)	24 V DC	
Frequency converter	Yes	No
Control signals	0-5 VDC, 1-5VDC, 0-10 VDC, 2-10 VDC, 0-16 VDC, 3.2-16 VDC, 0-20 VDC, 4-20 VDC, 0-20mA, 4-20 mA	
Control accuracy [4]	7-steps: ±3 %rh and 15-steps: ±2 %rh	7-steps: ±4 %rh and 15-steps: ±3 %rh
Number of steps (humidity control)		

Number of steps	Possible humidifier capacity range [kg/hr]	min. cross section [m^2]	max. capacity at min. cross section [5] [kg/hr]
3	5 - 10	0.2	10
7	> 10 - 560	0.4	45
15	> 25 - 1000	1.1	99
31	> 55 - 1000	1.8	204

Sound level		
Sound level	approx. 51 dB(A)	approx. 41 dB(A)
Hygiene		
Silver ionization cartridge "Hygiene Plus"	Yes	

	Condair DL	
	Type A (**with** booster pump)	Type B (**without** booster pump)
Communication		
Remote operating and fault indication	Yes	
Modbus RTU and Modbus TCP	Yes	
BACnet IP and BACnet MS/TP Master or Slave Mode	Yes	
IoT	Yes	
Interfaces		
Ethernet	Yes	
USB	Yes	
RS 485	Yes	
Air		
Pressure drop at 2 m/s air velocity	approx. 120 Pa	
Max. air velocity	2.5 m/s (without droplet separator), 4 m/s (with droplet separator)	
Air filter quality before humidification unit	ISO ePM1 60% (F7/EU7) or better	
Max. admissible air temperature	60°C (before humidification unit)	
Water		
Connector water supply	ø12 mm plug-in coupling or 1/2" male thread adapter (supplied)	
Connector water drain	ø10 mm plug-in coupling or 1/2" male thread adapter (supplied)	
Admissible water supply pressure	working pressure 3 ... 7 bar	working pressure 3 ... 7 bar
Admissible water temperature	5 ... 20 °C	
Water quality requirements	fully demineralised water from reverse osmosis system with 0.5...15 µS/cm (**without any additives**), max. 100 cfu/ml	
Operating monitoring RO water	min. pressure, max. pressure, pressure after sterile filter, conductivity	
Ambient conditions operation		
Admissible ambient temperature	5 ... 40 °C	
Admissible ambient humidity	10 ... 80 %rh, non-condensing	
Ambient conditions storage		
Admissible ambient temperature	5 ... 40 °C	
Admissible ambient humidity	10 ... 75 %rh, non-condensing	
Protection class		
Control unit	IP21	
Central unit	IP21	
Certificates		
Certificates	CE, DGUV according to Machinery Directive and VDI [7], DGUV Optimized Humidification [8], EAC, BTL	

1) Larger installation length on demand
2) Larger dimensions on demand
3) Larger capacities on demand (consider possible number of steps for capacity range!)
Note: For systems "Type A" (with booster pump), the minimum output of 5 kg/hr can only be regulated at a flow pressure <4.0 bar. With a flow pressure of ≥4.0 bar, we recommend a minimum output of 10 kg/hr for "Type A" systems.
4) The nominal control accuracy may not always be available, because various factors (temperature control, water recycling, flap valve systems, etc.) may affect the accuracy.
5) These values can be smaller influenced by other limit values such as humidity, volume flow or air speed! The values are to be understood as theoretical appoximate values, which are determined by the number of nozzles and their size. The maximum capacity values are achieved only with a booster pump.
6) Spray capacity (nozzle capacity) = Number of nozzles x Nozzle type x Pressure factor 1.323
7) Only if the installation is carried out correctly and the operating conditions specified by Condair are observed, and the maintenance intervals and maintenance work prescribed by Condair are adhered to.
8) Only if the installation is carried out correctly and the operating conditions specified by Condair are observed, and the maintenance intervals and maintenance work prescribed by Condair are adhered to. A Condair maintenance contract is mandatory.

9.2 Options

	Condair DL	
	Type A (**with** booster pump)	Type B (**without** booster pump)
Options		
Leak monitoring	x	x
Sterile filter	x	x
Air cleaning	x	x [1)]
External pipe flush	x	x
External water filter 5 µm	x	x
Gateway board (LonWorks or BACnet IP/BACnet MS/TP)	x	x
Mounting rack for central unit and control unit	x	x
Service disinfection: Connector for the hydraulic system for the introduction of disinfectant.	x	–
Water temperature monitoring: Monitoring of the inlet water temperature for triggering of a flushing if the limit values for the inlet water temperature are exceeded.	x	x
External valve block with additional drain valve: The valve block is integrated in an external housing separately from the central unit.	x	–
Clamping sheet bottom rubber sealing post evaporator. Additional fixation of the rubber sealing with spring metal sheets.	x	x
IoT Mobile Module: Enables wireless connection to Condair IoT Cloud.	x	x

[1)] available only for Type B with sterile filter

CONSULTING, SALES AND SERVICE:

CH94/0002.00

Condair Group AG
Gwattstrasse 17, 8808 Pfäffikon SZ, Switzerland
Phone +41 55 416 61 11, Fax +41 55 588 00 07
info@condair.com, www.condairgroup.com